REV.	DESCRIPTION	DRAW.	DATE.

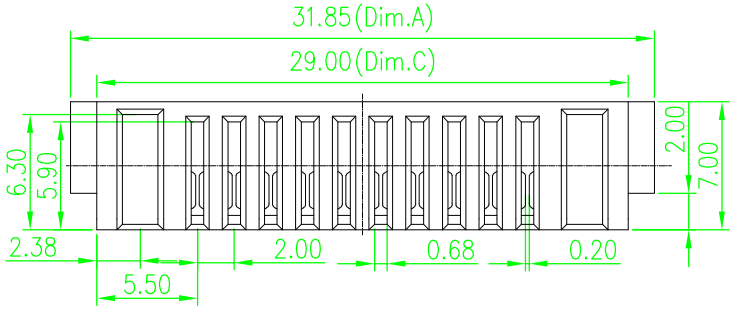

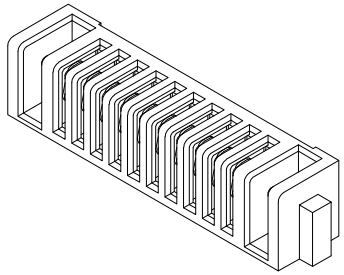

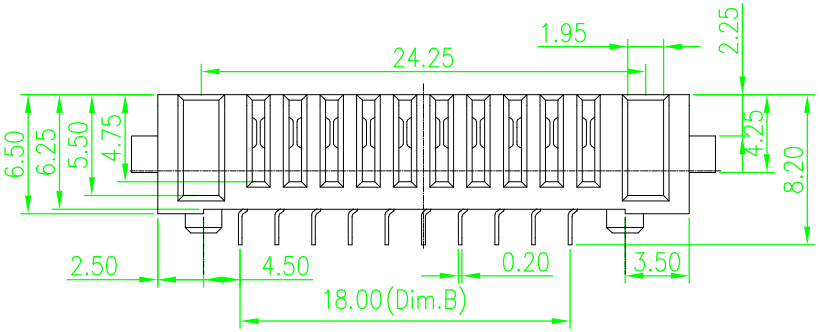

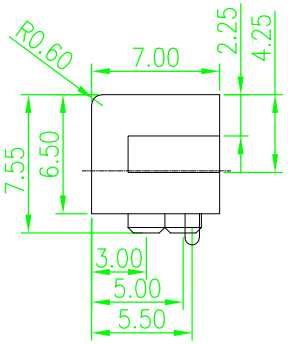

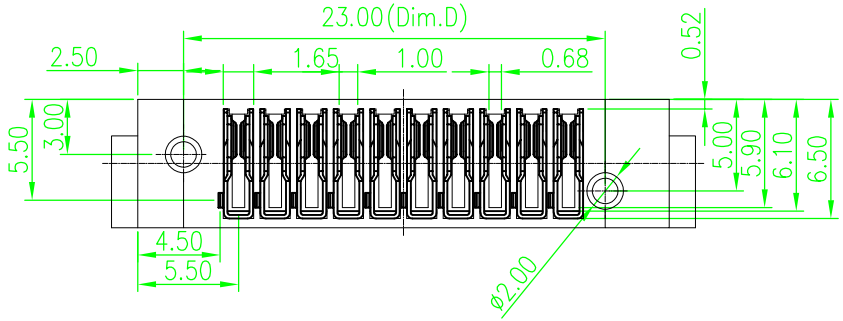

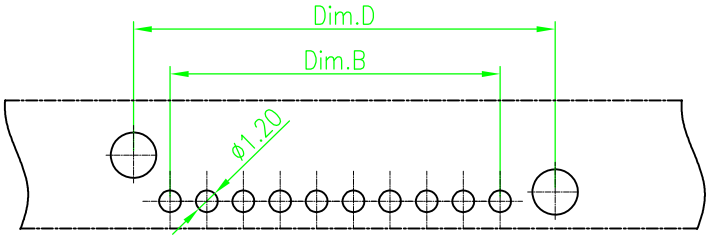

Recommended P.C.B Layout

No.of Pins	Dimension			
	DIM.A	DIM.B	DIM.C	DIM.D
03	17.85	4.00	15.00	9.00
04	19.85	6.00	17.00	11.00
05	21.85	8.00	19.00	13.00
06	23.85	10.00	21.00	15.00
07	25.85	12.00	23.00	17.00
08	27.85	14.00	25.00	19.00
09	29.85	16.00	27.00	21.00
10	31.85	18.00	29.00	23.00
11	33.85	20.00	31.00	25.00
12	35.85	22.00	33.00	27.00

Material
Insulator : Nylon 9T (UL94V-0)
Contact : Phosphor Bronze
Contact Plated : Gold over Nickel or Tin
Specification
Current Rating : 5A
Instant Current : 7A
Contact Resistance : 30mΩ
Insulation Resistance : 100MΩ
Dielectric Voltage : 500V
Operating Temperature : -40°~105°

东莞市溪榜电子有限公司
DONG GUAN XI BANG ELECTRONI CS CO., LTD.

UNLESS OTHERWISE SPECIFIED,TOLERANCE: X. ±0.20 X.x ±0.15 X.xx ±0.10 ANGULAR ±2°	DESIGN		DATE		TITLE: BATTERY FEMALE 2.0PITCH BOARD TO BOARD CONNECTOR
	APPROVED		DATE		
	PART NO	XB-A01F-H1-A	REV: 01		SCALE: 1:1 UNIT: mm
	DRAWING NO	XB-A01F-H1-A	SIZE: A4		SHEET: 1/1