REVSION		
POSITION	DESCRIPTION	DATE
1		

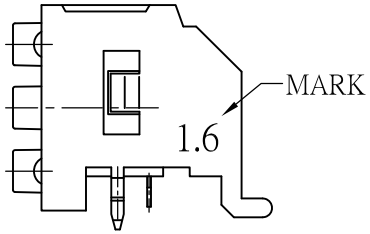

P VIEW

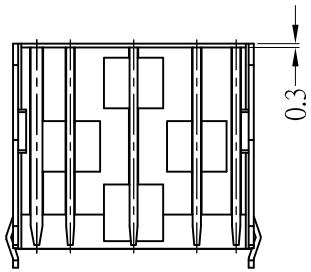

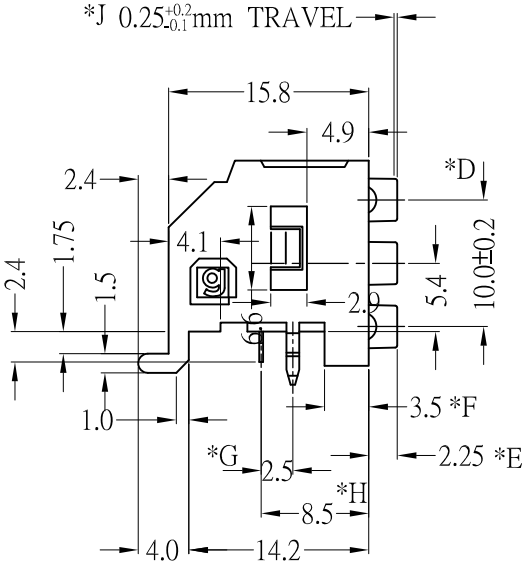

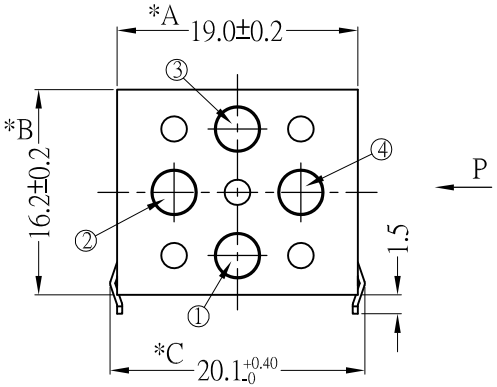

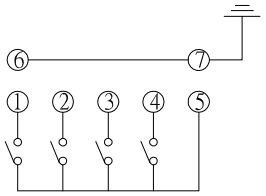

SCHEMATIC

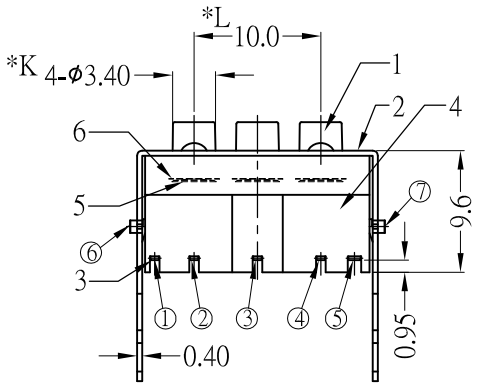

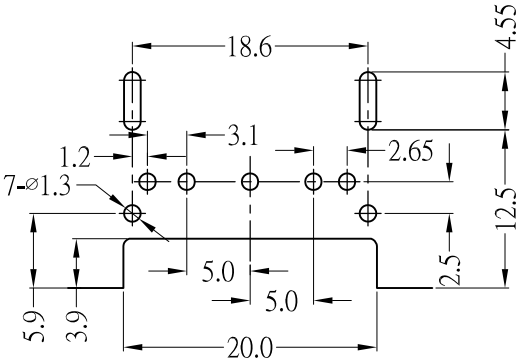

PCB LAYOUT (TOP VIEW)

TOLERANCE:±0.05mm

NOTES:

1、OPERATING TEMPERATURE:-20℃ TO +70℃.
2、STORAGE TEMPERATURE:-30℃ TO +80℃.
3、CURRENT RATING:DC 12V 50mA.
4、CONTACT RESISTANCE:100 m ohms MAX.
5、INSULATION RESISTANCE:100 M ohms min.(DC 100V)
6、DIELECTRIC WITHSTANDING VOLTAGE:AC 250V (50Hz OR 60Hz)1 MINUTE.
7、TRAVEL:0.25+0.2 -0.1 mm.
8、ACTUATING FORCE:160±50gf.
9、RETURN FORCE:50gf min.
10、LIFE CYCLE:100K CYCLES min.

* CRITICAL DIMENSION

东莞市溪榜电子有限公司
DONG GUAN XI BANG ELECTRONI CS CO., LTD.

SERIES : TACT SWITCH		DRAWING NO.	XB-TS-904
PART NAME :		GENERAL TOLERANCE	
UNIT : MM	DWN.	X.XXmm±0.25mm X.Xmm±0.35mm	
SCALE : 5:1	CHK'D		
REV : A/0	APPD.		

NO.	PART NAME	MATERIAL	QTY	FINISHING
7				
6	MEMBRANE	SILICONE	4	YELLOW
5	CONTACT	SUS 301	4	Ag CLAD(3u"min)
4	HOUSING	PA66-G40	1	BLACK
3	TERMINAL	BRASS STRIP	1	Ag COATING(3u"min)
2	FRAME	SPCC	1	Sn COATING (50u"min)
1	STEM	PA66-G40	4	BLACK

A B C D

1 2 3 4