REVISION	A

SYMB	REVISON	DATE	APVD.

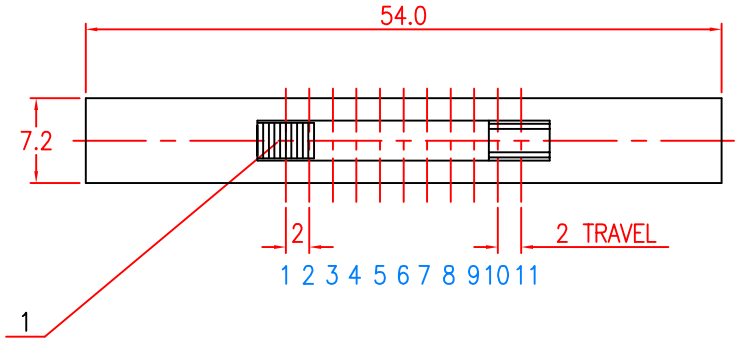

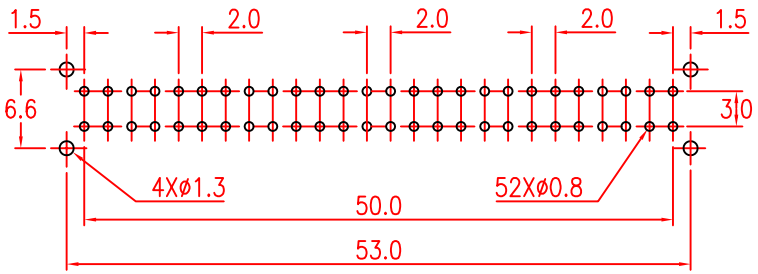

P.C.B LAYOUT

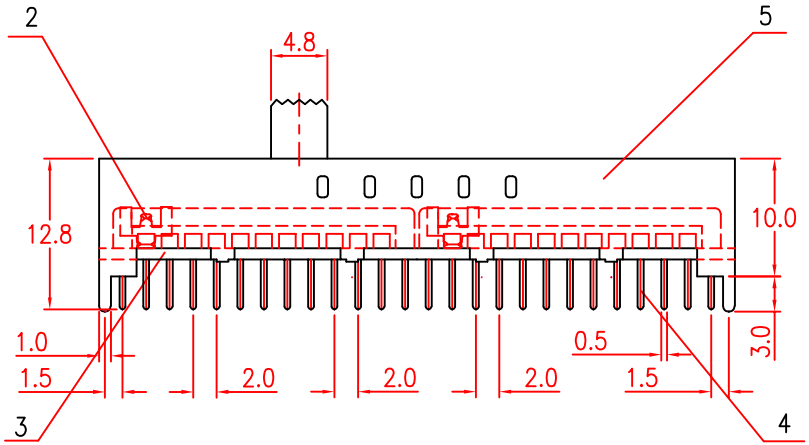

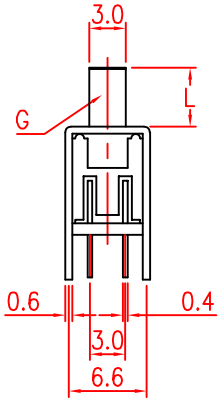

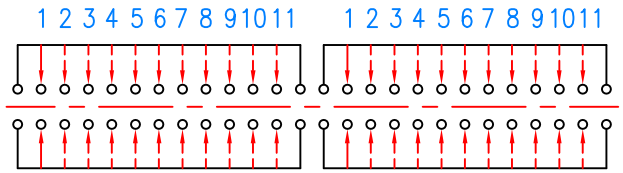

CIRCUIT

L=6.0mm

TITLE	SLIDE SWITCH		DRAWN		TOLERANCE OTHERWISE UNLESS SPECIFIED		9				
							8				
PART NO.	XB-SS-411D01-G		CHECKED		UP TO 5	±0.2	7				
					ABOVE 5 ~ 30	±0.3	6				
DRAW NO.	S135		APPROVED		ABOVE 30 ~ 50	±0.4	5	FRAME	SPCC	1	Ni PLATED
					ABOVE 50	±0.5	4	TERMINAL	BRASS STRIP	52	Ag PLATED
SCALE	3:2	UNIT mm	DATE	23-04-2000	ANGLE	±3°	3	BASE	PHENOLIC RESIN	1	NATURAL
东莞市溪榜电子有限公司 DONG GUAN XI BANG ELECTRONI CS CO., LTD.							2	CONTACT PLATE	PBS	4	Ag PLATED
							1	KNOB	POM	1	BLACK
							NO.	PARTS	MATERIAL	QTY.	FINISHING