REVISION	A

RoHS Compliant

SYMB	REVISON	DATE	APVD.

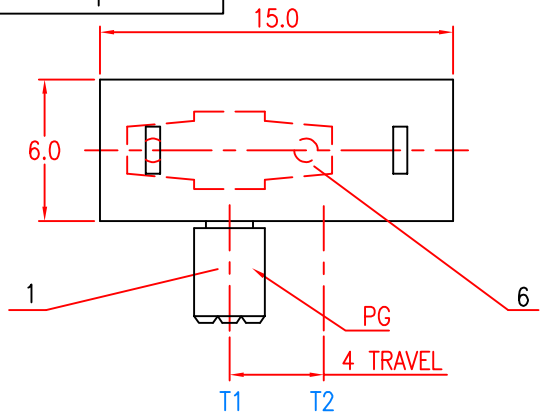

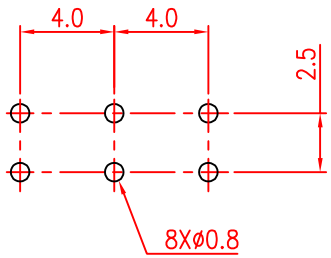

P.C.B LAYOUT

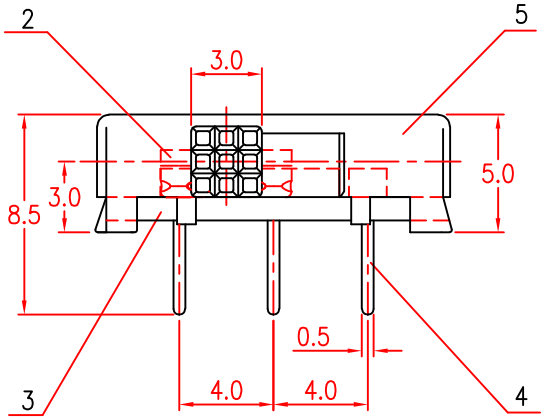

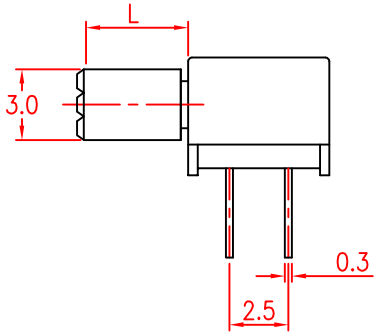

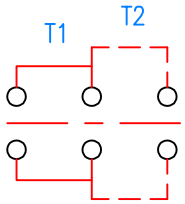

CIRCUIT

L=8.0mm

TITLE	SLIDE SWITCH			DRAWN	L.Liu	TOLERANCE OTHERWISE UNLESS SPECIFIED		8				
								7				
PART NO.	XB-SK-22H11			CHECKED	G.C.Chen	UP TO 5	±0.2	6	SPRING PLATE	PHOSPHOR BRONZE	1	NATURAL
						ABOVE 5 ~ 30	±0.3	5	FRAME	SPCC	1	Ni PLATED
DRAW NO.	K256			APPROVED	H.K.Lai	ABOVE 30 ~ 50	±0.4	4	TERMINAL	BRASS STRIP	8	Ag PLATED
						ABOVE 50	±0.5	3	BASE	PHENOLIC RESIN	1	NATURAL
SCALE	3:1	UNIT	mm	DATE	18-5-2012	ANGLE	±3°	2	CONTACT PLATE	PBS	2	Ag CLAD
								1	KNOB	POM	1	BLACK
								NO.	PARTS	MATERIAL	QTY.	FINISHING

东莞市溪榜电子有限公司
DONG GUAN XI BANG ELECTRONI CS CO., LTD.

Copyright Reserved,Please Do Not Copy. 版权所有,不得翻印.