REVISION	A	RoHS Compliant

SYMB	REVISON	DATE	APVD.

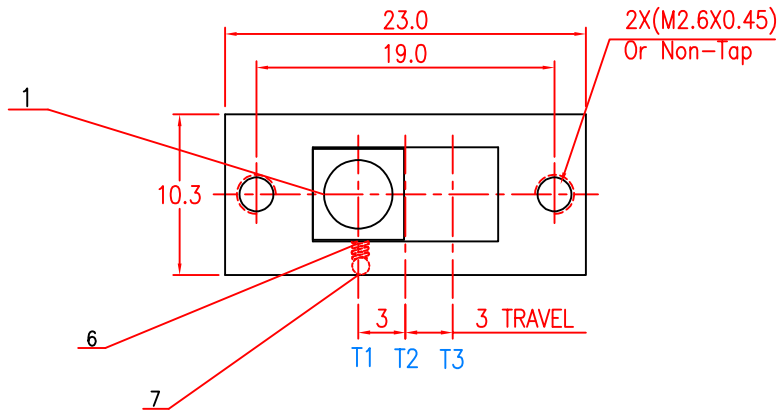

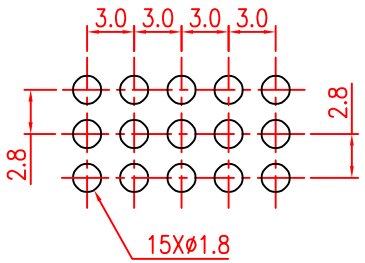

P.C.B LAYOUT

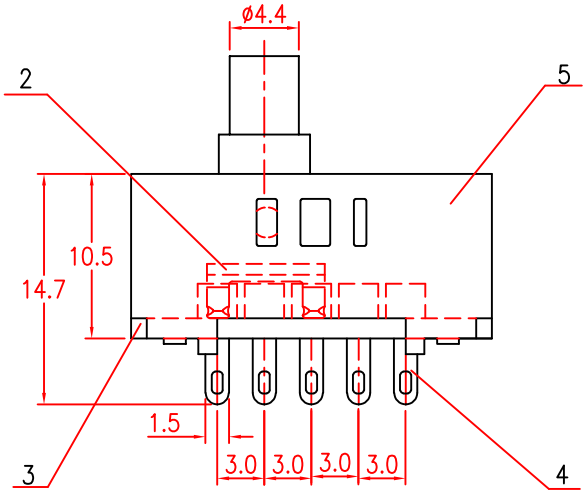

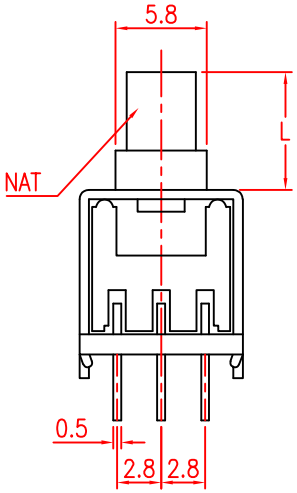

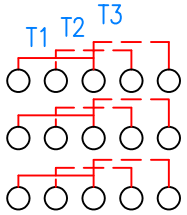

CIRCUIT

L=13.5mm

TITLE	SLIDE SWITCH	DRAWN	L.Liu	TOLERANCE OTHERWISE UNLESS SPECIFIED	
PART NO.	XB-SS-33F01	CHECKED	G.C.Chen	UP TO 5	±0.2
DRAW NO.	S198	APPROVED	H.K.Lai	ABOVE 5 ~ 30	±0.3
SCALE	2:1 UNIT mm	DATE	26-10-2001	ABOVE 30 ~ 50	±0.4
				ABOVE 50	±0.5
				ANGLE	±3°

NO.	PARTS	MATERIAL	QTY.	FINISHING
8				
7	SPRING	SUS STEEL	1	NATURAL
6	BALL	SUS	2	Ni PLATED
5	FRAME	SPCC	1	Ni PLATED
4	TERMINAL	BRASS STRIP	15	Ag PLATED
3	BASE	PHENOLIC RESIN	1	NATURAL
2	CONTACT PLATE	PBS	3	Ag PLATED
1	KNOB	POM	1	BLACK

东莞市溪榜电子有限公司
DONG GUAN XI BANG ELECTRONI CS CO., LTD.

Copyright Reserved,Please Do Not Copy. 版权所有,不得翻印.