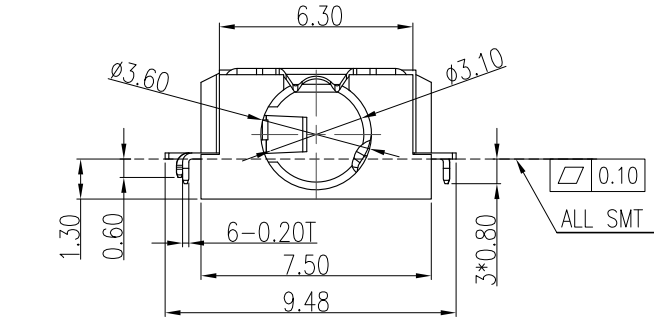


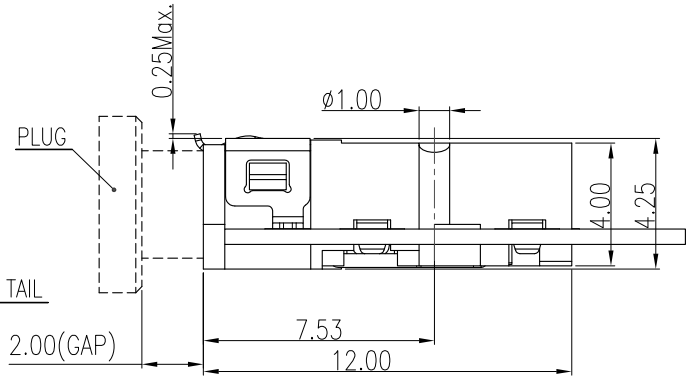


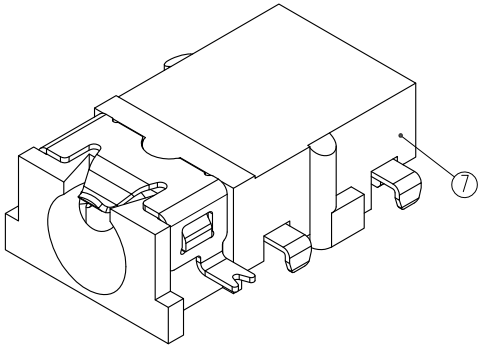


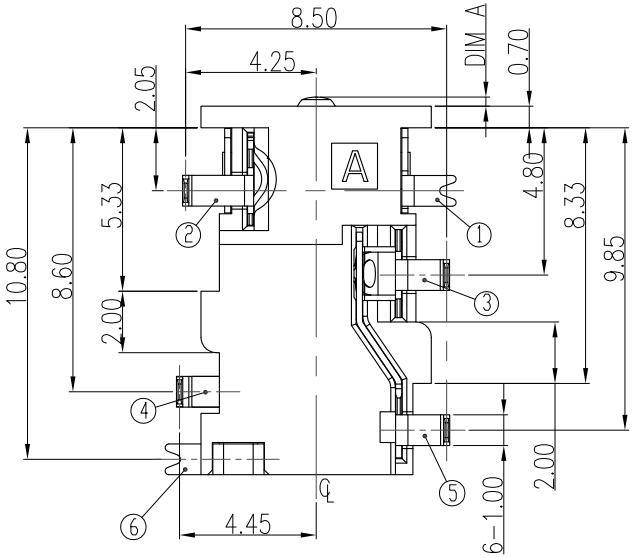


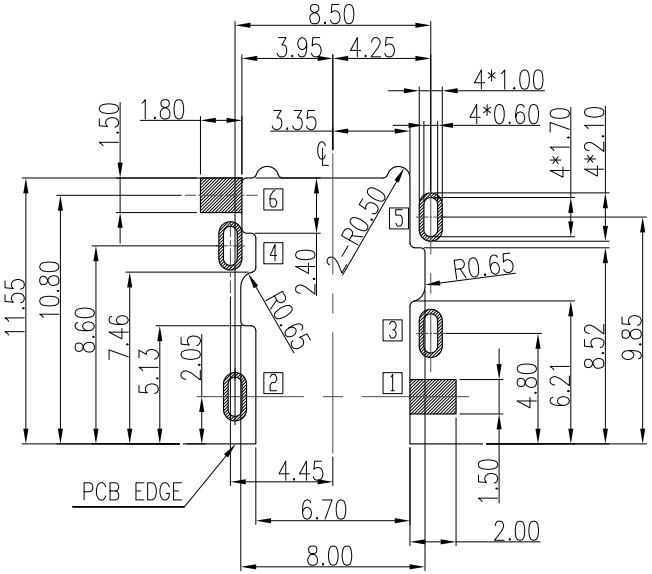


RECOMMENDED PCB LAYOUT(TOP VIEW)
(GENERAL TOLERANCE±0.05)

Note:
1.Contact Current Rating:12V 1A.
2.Contact Resistance:50mΩ MAX.
3.Insulation Resistnace:100MΩ Min.500V DC.
4.Dielectric Withstandeing: 500V AC Min.
5.Durability:5000 Cycles Min.
6.Connector Mating Forces:29.4N(3.00Kgf) MAX.
7.Connector Unmating Forces:2.94N(0.30Kgf) Min.
8.The Product Machine With A GAP That:The Finished Machine With Socket Before/Up/Down/Left/Right Side Of 5,Protection GAP First Proposed,The Desing OF 0.15mm.

Table 1:

| P/N | DIM A |
|---|---|
| J313T06G1KZL2 | 0.00 |
| J313T06G1VZL2 | 0.30±0.06 |

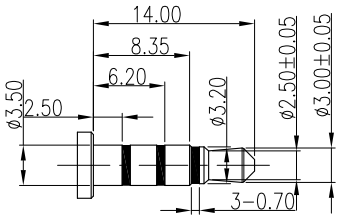


PLUG SPEC

SCHEMATIC

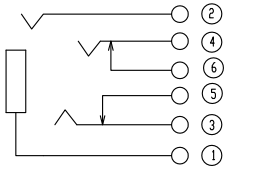

AFTER INSERT SCHEMATIC

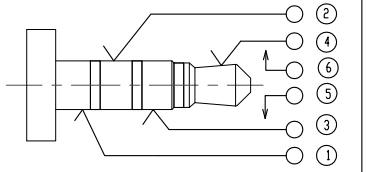

| NO. | DESCRIPTION | MAT,L | COLOR | REMARK |
|---|---|---|---|---|
| 7 | HOUSING | HIGH TEMP | BLACK | ——— |
| 6 | TERMINAL 6 | COPPER ALLOY | ——— | GOLD PLATED/TIN |
| 5 | TERMINAL 5 | COPPER ALLOY | ——— | GOLD PLATED/TIN |
| 4 | TERMINAL 4 | COPPER ALLOY | ——— | GOLD PLATED/TIN |
| 3 | TERMINAL 3 | COPPER ALLOY | ——— | GOLD PLATED/TIN |
| 2 | TERMINAL 2 | COPPER ALLOY | ——— | GOLD PLATED/TIN |
| 1 | TERMINAL 1 | COPPER ALLOY | ——— | GOLD PLATED/TIN |

CUSTOMER COPY

东莞市溪榜电子有限公司
DONG GUAN XI BANG ELECTRONI CS CO., LTD.

| | |
|---|---|
| TITLE: | Ø 3.50 mm PHONE JACK CONNECTOR |
| PART NO. | SEE "Table 1" |
| PRODUCT SPEC. | JH-RD-W06 |
| D ING FILE NAME. | J313T06G1XZL2- |
| SCALE 4:1 | UNIT:mm A4 SHEET: 1 of 1 |

| ECN NO. | REV | DATE | DESCRIPTION | CHANGE | APPRO. |
|---|---|---|---|---|---|
| JH2015-141 | E | 12/11-'15 | 新增J313T06G1VZL2规格 | 任翔 | 吕海涛 |
| JH2015-121 | D | 11/16-'15 | 尺寸公差调整由0.30+0.00/-0.08变更为0.30+/-0.06 | 任翔 | 吕海涛 |

GENERAL TOLERANCE UNLESS OTHERWISE NOTED

| | |
|---|---|
| Angle | ±2° |
| X | ±0.35 |
| .X | ±0.25 |
| .XX | ±0.20 |

| | | |
|---|---|---|
| DESIGN | 任翔 | 12/11-'15 |
| CHECK | 郑小伟 | 12/11-'15 |
| APPRO. | 吕海涛 | 12/11-'15 |