REV.	EC#	DESCRIPTION	DATE	APPROVED
A		新版发行	2019.05.27	

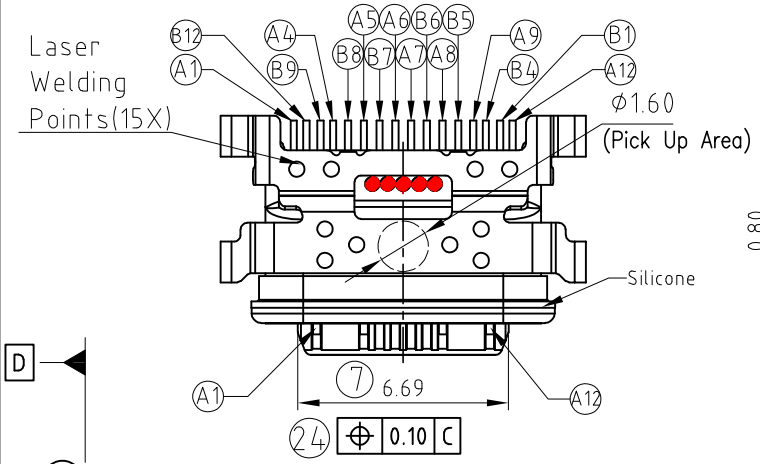

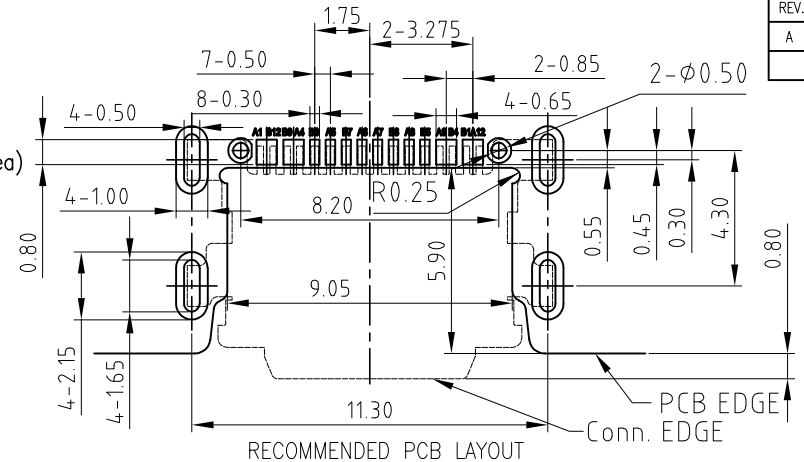

RECOMMENDED PCB LAYOUT

TOLERANCE:±0.05

(建议使用刷Sn钢板厚度0.12mm)

NOTES:

SPECIFICATION:

1. CURRENT RATING: 3.0A MAX
2. VOLTAGE: 100 VAC
3. TEMPERATURE RANGE: -30 °C ~ 85 °C
4. CONTACT RESISTANCE: 40 MILLIONHM MAX
5. INSULATION RESISTANCE: 100 MEGOHMS MIN.
6. LNSERTION FORCE : 5N~20N
7. UNMATING FORCE: 8N~20N
8. DURABILITY: 10,000 CYCLES

Pin Assignments

Contact Number	Signal Name	Contact Number	Signal Name
A1	GND	B12	GND
A4	VBUS	B9	VBUS
A5	CC1	B8	SBU2
A6	Dp1	B7	Dn2
A7	Dn1	B6	Dp2
A8	SBU1	B5	CC2
A9	VBUS	B4	VBUS
A12	GND	B1	GND

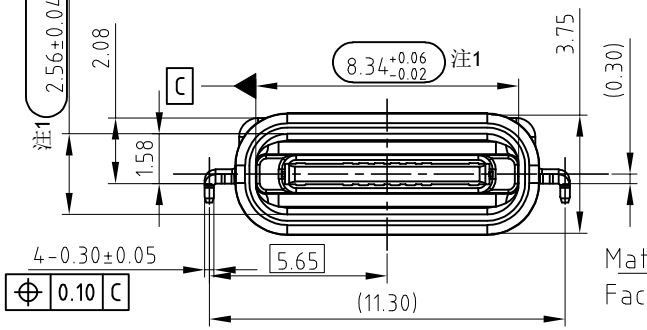

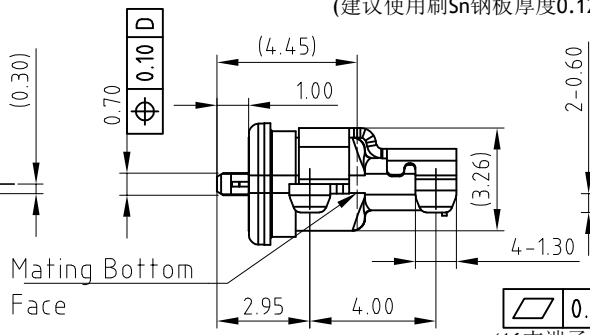

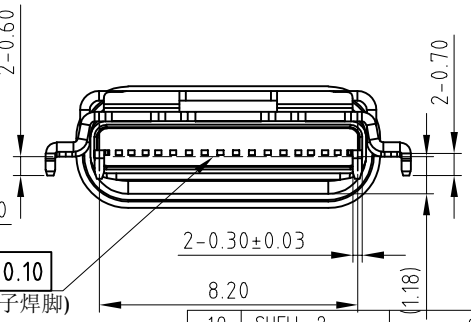

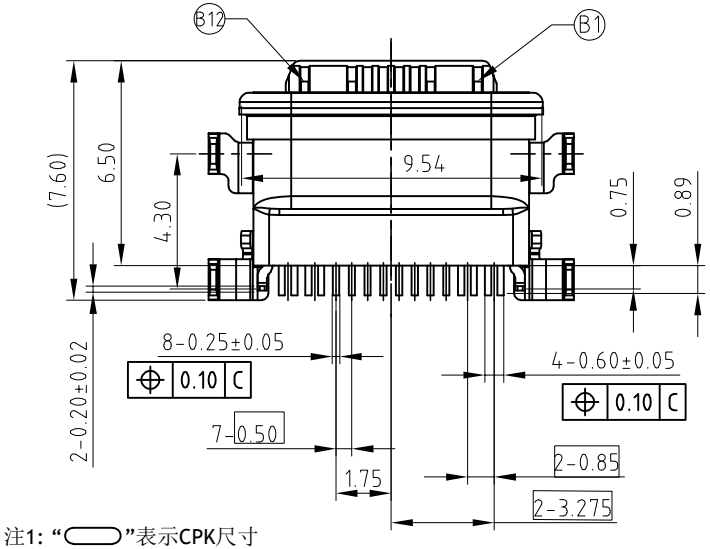

注1: "◯"表示CPK尺寸

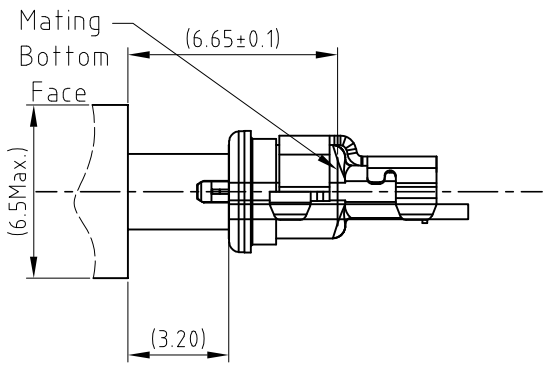

Mated Condition(REF.)

NO.	DESCRIPTION	MATERIAL	REMARKS	QTY
10	SHELL-2	STAINLESS STEEL	NI Plated	1PCS
9	LIM	SILICA GEL	BLACK	1PCS
8	TOP SHELL	STAINLESS STEEL	TI/NI Plated	1PCS
7	SHELL	STAINLESS STEEL	NI Plated	1PCS
6	OVER MOLDING	HIGH TEMPERATURE PLASTIC	BLACK	1PCS
5	TOP I/M	HIGH TEMPERATURE PLASTIC	BLACK	1PCS
4	BOTTOM I/M	HIGH TEMPERATURE PLASTIC	BLACK	1PCS
3	MID PLATE	STAINLESS STEEL	TI/NI Plated	1PCS
2	CONTACT	COPPER ALLOY	Au/NI Plated	1SET
1	CONTACT	COPPER ALLOY	Au/NI Plated	1SET

TOLERANCES UNLESS OTHERWISE SPECIFIED
GENERAL X. ±0.38 .X ±0.25 .XX ±0.10 .XXX ±0.05
ANGLES X.° ±3.0° .X ±2.0° .XX ±1.0°

SCALE
SHEET 1 OF 1
UNIT mm

东莞市溪榜电子有限公司
DONG GUAN XI BANG ELECTRONICS CO., LTD.

APPROVED DATE
CHECKED DATE
DESIGN DATE 2019.05.27

TITLE Customer Drawing for USB Type-C 母 16pin 防水型, IPX7,沉板1.13,外露1.0

SERIES K20Pro Mi9T/CC9E
SIZE A4
DWG NO.
REV. A

These drawings and specifications are the property of Dongguan Xibang Electronics Co., Ltd. and should not be copied. Without the prior written consent of Dongguan Xibang Electronics Co., Ltd., it shall not be copied or used in any way