RoHS Compliant

| SYMBOL | REVISION | APPROVAL | DATE |
|---|---|---|---|
| | | | |
| | | | |

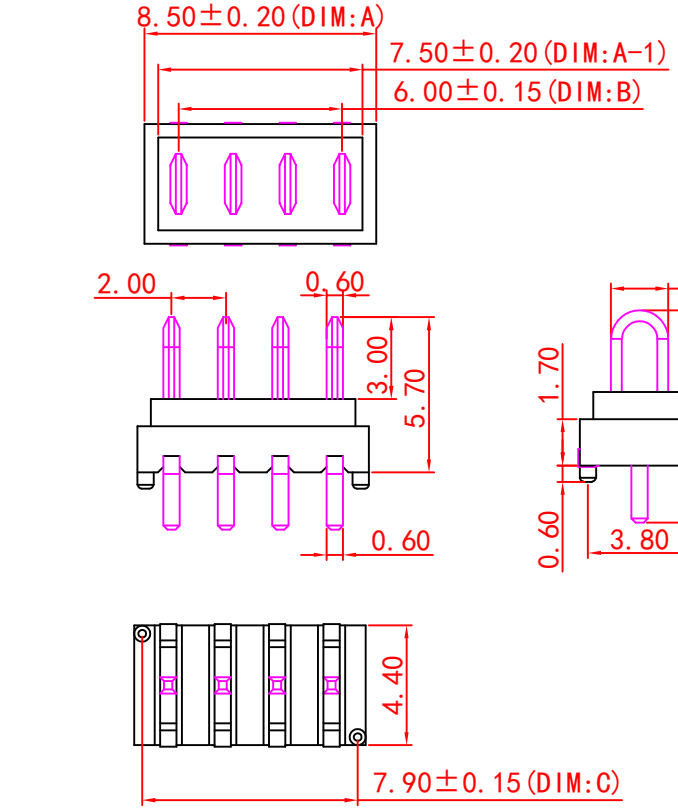


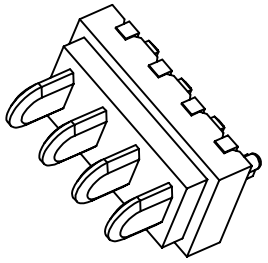

3D VIEW

| No.of Pins | Dimension | | |
|---|---|---|---|
| | DIM.A | DIM.B | DIM.C |
| 02 | 4.50 | 2.00 | 3.90 |
| 03 | 6.50 | 4.00 | 5.90 |
| 04 | 8.50 | 6.00 | 7.90 |
| 05 | 10.50 | 8.00 | 9.90 |
| 06 | 12.50 | 10.00 | 11.90 |
| 07 | 14.50 | 12.00 | 13.90 |
| 08 | 16.50 | 14.00 | 15.90 |
| 09 | 18.50 | 16.00 | 17.90 |
| 10 | 20.50 | 18.00 | 19.90 |

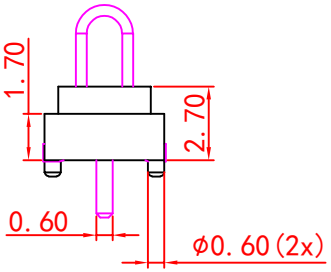


Material
Insulator : LCP
Contact : C2680
Contact Plated : Gold over Nickel or Tin
Specification
Current Rating : 3A
Instant Current : 5A
Contact Resistance : 30mΩ
Insulation Resistance : 100MΩ
Dielectric Voltage : 500V
Operating Temperature : −40°~105°

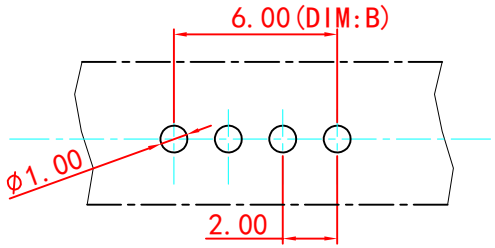


RECOMMNDED P.C.BOARD LAYOUT

| NO. | PARTS | MATERIAL | QTY. | FINISHING |
|---|---|---|---|---|
| 2 | HOUSING | LCP | 1 | GRAY |
| 1 | CONTACT TERMINAL | C2680 | 4 | Au PLATED |

东莞市溪榜电子有限公司
DONG GUAN XI BANG ELECTRONI CS CO., LTD.

COPYRIGHT RESERVED,PLEASE DO NOT COPY.

| | | | | | | |
|---|---|---|---|---|---|---|
| PART NAME | CONNECTOR | | DRAWING | DONG.PANG | DWG.No. | |
| PART NO. | XB-A00M-4P-R1 | | CHECK | ZENQ.CHEN | REV. | A1 |
| UNIT: mm | TOLERANCE OTHERWISE | UP TO 5 ±0.2; ABOVE 5 ~30 ±0.3; ABOVE 30 ±0.5; ANGLE ±3° | ANGLE 0°±3° | APPROVAL | LIANG.WU | DATE 08-08-2018 |
| | | | | SCALE | 2:1 | PAGE 1 OF 1 |