REV.	DESCRIPTION	APPROVED	DATE

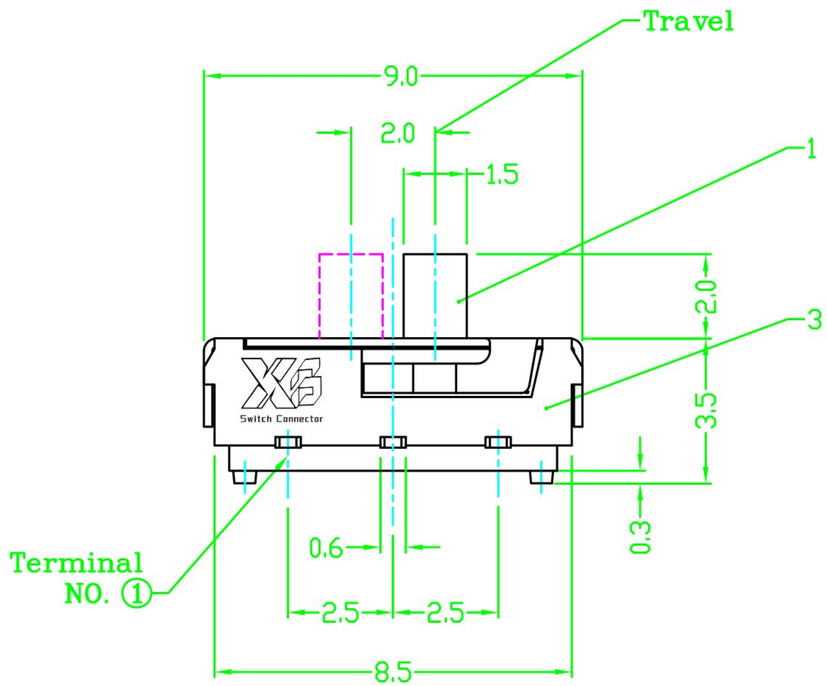

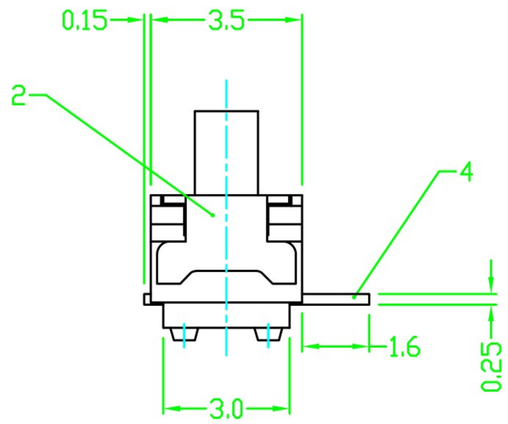

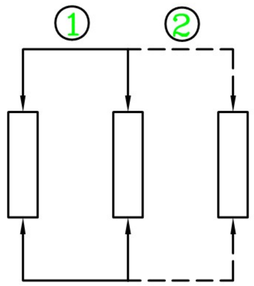

CIRCUIT DIAGRAM

FORCE: 200+/−50gf

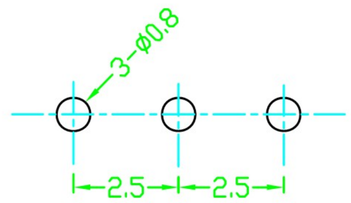

P.C.BOARD LAYOUT

NO.	PART NAME	MATERIAL	QTY.	FINISHING
5	CONTACT CLIP	COPPER ALLOY	2	Ag CLAD
4	TERMINAL	BRASS STRIP	3	Ag PLATED
3	HOUSING	NYLON PA46	1	BLACK
2	METAL COVER	STAINLESS STEEL	1	NATURAL
1	KNOB	NYLON PA46	1	BLACK

TOLERANCES UNLESS OTHERWISE STATED

DIMENSIONAL	±0.2
ANGULAR	±3°

PROJECTION

DO NOT SCALE THIS DRAWING

DRAWN	CHECKED	APPROVED
G. D. T. DEC-10/2007		

东莞市溪榜电子有限公司
DONG GUAN XI BANG ELECTRONI CS CO., LTD.

TITLE	3.5(H)MM, 2MM-TRAVEL MINI SLIDE SWITCH
MODEL	XB-MSK-003X
P/N	
DATE	2012-AUG-8

UNIT : MM	REV.: A	SCALE : 5 :1	SIZE : A4