REV.	DESCRIPTION	APPROVED	DATE

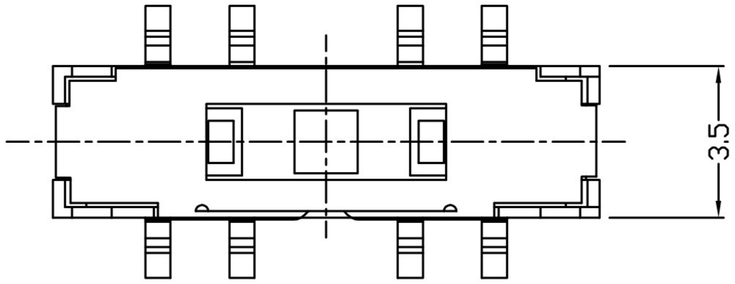

Operating force with detent:

a → b, c → b } 1.5±1.0N

b → a, b → c } 2.5±1.5N

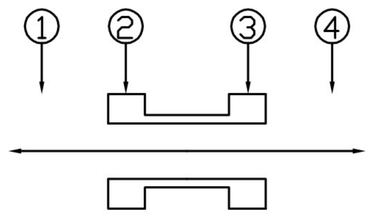

CIRCUIT DIAGRAM

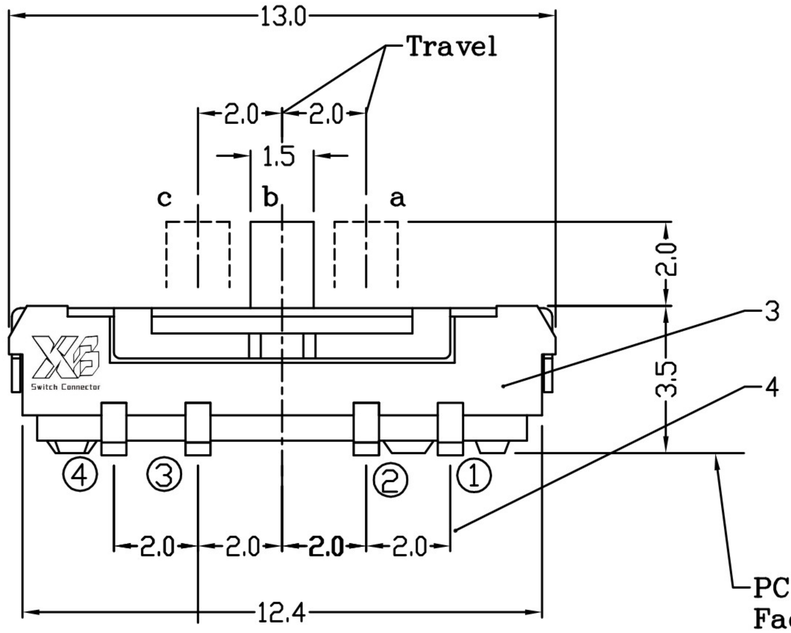

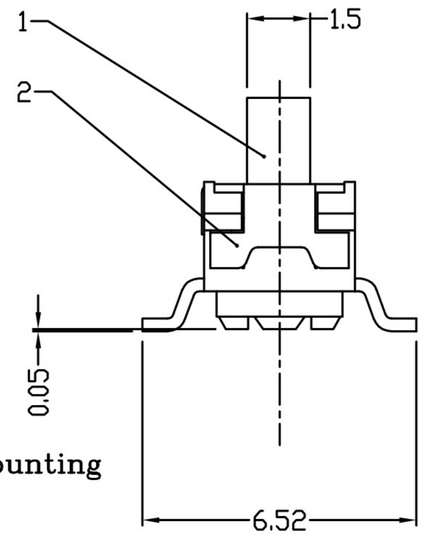

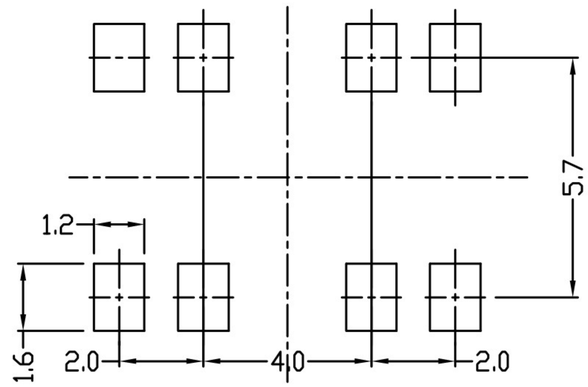

P.C.BOARD LAYOUT

BOTTOM VIEW

NO.	PART NAME	MATERIAL	QTY.	FINISHING
5	CONTACT CLIP	PBS C5210-EH	1	Ag CLAD
4	TERMINAL	BRASS C2680	4	Ag PLATED
3	HOUSING	NYLON PA46	1	COFFEE
2	METAL COVER	SUS 301	1	NATURAL
1	KNOB	NYLON PA46	1	WHITE

TOLERANCES UNLESS OTHERWISE STATED

DIMENSIONAL	±0.2
ANGULAR	±3°

PROJECTION

DO NOT SCALE THIS DRAWING

DRAWN	CHECKED	APPROVED
G D T	Peter.Guo	Bill.Deng
Jun-10/2009	Jun-10/2009	Jun-10/2009

东莞市溪榜电子有限公司

DONG GUAN XI BANG ELECTRONI CS CO., LTD.

TITLE	3.5(H)MM, 2MM-TRAVEL MINI SLIDE SWITCH
MODEL	XB-MSK-008M-L2
P/N	
DATE	2009-JUN-10

UNIT : MM | REV.: A | SCALE : 5 :1 | SIZE : A4