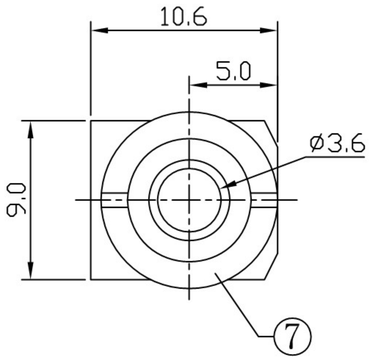

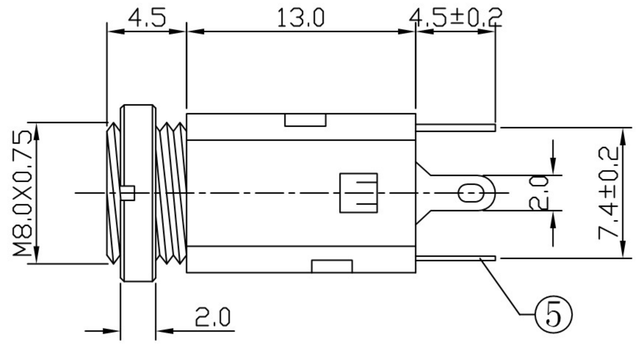

P.C.B LAYOUT
TOP VIEW

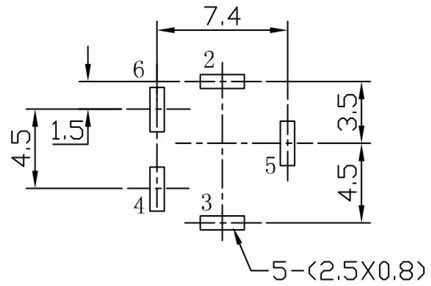

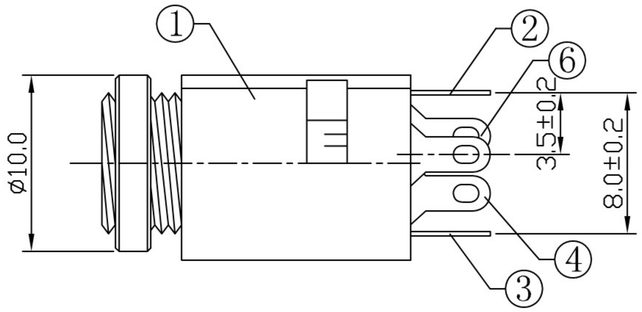

SCHEMATIC

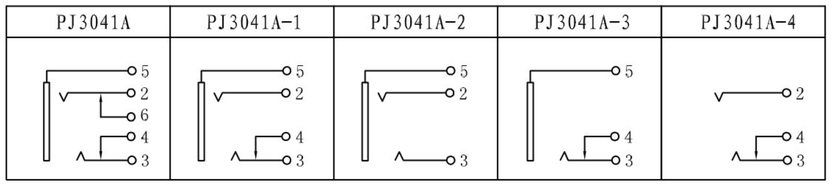

SPECIFICATION

1. Rating : DC 30V 0.5A;
2. Contact resistance: ⩽30mΩ;
3. Insulation resistance: ⩾100MΩ (DC250V);
4. Withstand voltage: 500VAC ;
5. Insertion and extraction force: 3-25N;
6. life test: 5,000 cycles。

NO.	DESCRIPTION	QTY	MATERIAL	PLATING
7	CAP	1	H59 BRASS	Ni-Plating
6	CURVE PIECE	1	H59 BRASS	Ag-Plating
5	CONTACT FOOT	1	PHOSPHOR BRONZE	Ag-Plating
4	CURVE PIECE	1	BRASS	Ag-Plating
3	SPRING PIECE	1	PHOSPHOR BRONZE	Ag-Plating
2	CONTACT FOOT	1	PHOSPHOR BRONZE	Ag-Plating
1	HOUSING	1	PBT	

UNIT: MM	TYPE:	MODEL NO:	PAPER NO: A4		PAGE 1 OF 1	
	PHONE JACK	XB-PJ-341A-5P	TOLERANCE	ANGLES	SCALE	VER
			±0.3	±2°	1:1	1

DESIGNER BY:
CHECK BY:
APPROVED BY:

东莞市溪榜电子有限公司
DONG GUAN XI BANG ELECTRONI CS CO., LTD.