PIN Φ 2.0mm/2.5mm

RoHS Compliant

SYMBOL	REVISION	APPROVAL	DATE

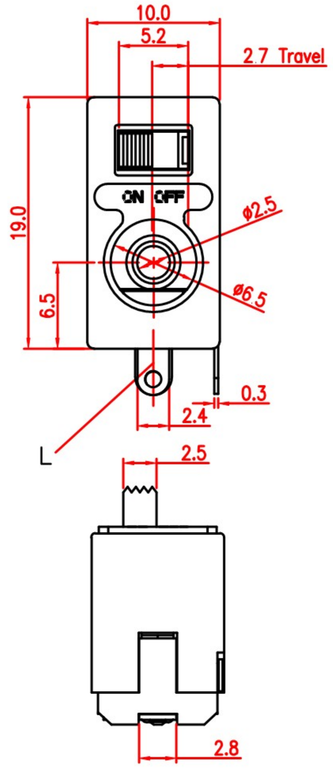

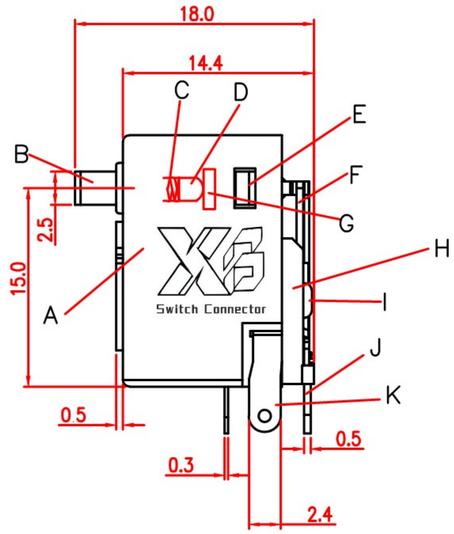

SPECIFICATIONS

1. ELECTRICAL CHARACTERISTICS:
   1-1.RATING: DC 16V 3A
   1-2.CONTACT RESISTANCE: 30mΩ MAX(INITAL)
   1-3.DIELECTRIC WITHSTANDING VOL TAGE: 500V AC FOR ONE MINUTE
   1-4.INSULATION RESISTANCE: 100MΩ MIN,MEASURED BY 500V DC
2. LIFE TEST:
   2-1.Electronics Life Test 6,000 cycles.

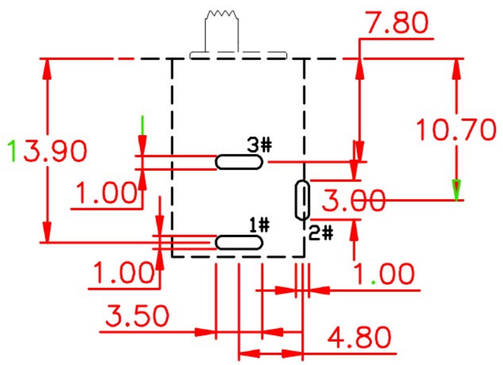

P.C.B LAYOUT
BOTTOM VIEW

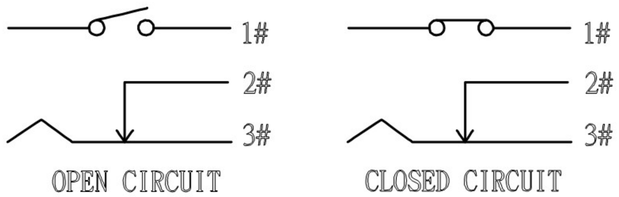

SCHEMATIC

No.	DESCRIPTION	MATERIAL	PLATING
A	HOUSING	PA66 94V-0	BLACK
B	KNOB	PA66 94V-0	WHITE
C	SPRING	STAINLESS STEEL	NATURAL
D	BEAD	SUS	NATURAL
E	COVER 1	PA66 94V-0	BLACK
F	TERMINAL 1	C2680	Ag Plated
G	CONTACT PIECE	C2680	Ag Plated
H	COVER 2	PA66 94V-0	BLACK
I	PIN	BARSS	Ni Plated
J	TERMINAL 2	C2680	Ag Plated
K	TERMINAL 3	C2680	Ag Plated
L	TERMINAL 4	C5210	Ag Plated

MATE PLUG

东莞市溪榜电子有限公司
DONG GUAN XI BANG ELECTRONI CS CO., LTD.
Switch Connector

COPYRIGHT RESERVED,PLEASE DO NOT COPY.

PART NAME	DC & SW SERIES	DRAWING		DWG.No.	
PART NO.	XB-DC-011T	CHECK		REV.	A
UNIT : mm	TOLERANCE OTHERWISE: UP TO 5 ±0.2; ABOVE 5 ~30 ±0.3; ABOVE 30 ±0.5; ANGLE ±3°	ANGLE 0°±3°	APPROVAL	DATE	
			SCALE 2:1	PAGE	1 OF 1