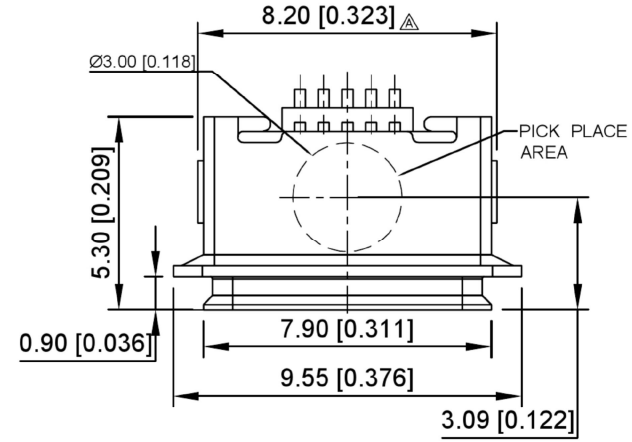

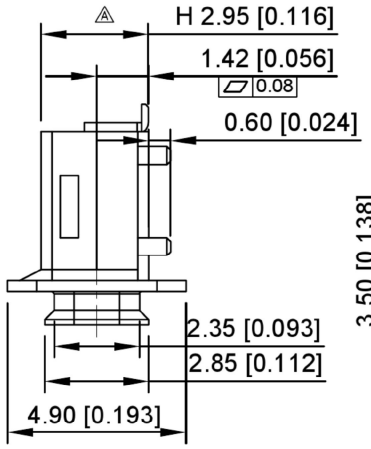

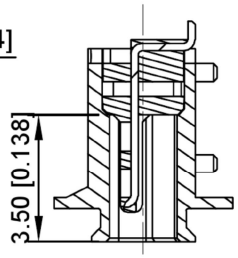

NOTES:
1.MATERIAL:
HOUSING: THERMOPLASTIC HIGH-TEMP UL94V-O BLACK COLOR
CONTACT:COPPER ALLOY
SHELL: STAINLESS STEEL
2.FINISH:
2.1. TERMINAL CONTACT(SEE TAB)The minimum nickel plating base of the terminal is 50u", the contactpart is plated with Gold-plated 30u" , and the solder foot area is plated with Tin plating 75u"~150u".
2.2、OUT SHELL:50u"Min. NICKEL ALL OVER
3.APPLIED TO IR SOLDERING PROCESS
4.SPECIFICATION:
4.1.ELECTRICAL CHARACTERISTICS
CONTACT CURRENT RATING:Signal PIN 1A.Power PIN 1.8A.
VOLTAGE RATING:30V AC rms.
CONTACT RESISTANCE:30mΩ MAX.
DIELECTRIC WTHSTANDING VOLTANGE:
UNMATEP CONTACT 100V AC rms. 6OMHZ FOR 1 MINUTE
INSULATION RESISTANCE:1000MΩ MIN.100V DC
TEMPERATURE RANGE:-30 ℃ TO+85℃
4.2.MECHANICAL:
INSERTION FORCE:35N MAX.
WITHDRAWAL FORCE:5N MIN25N MAX.

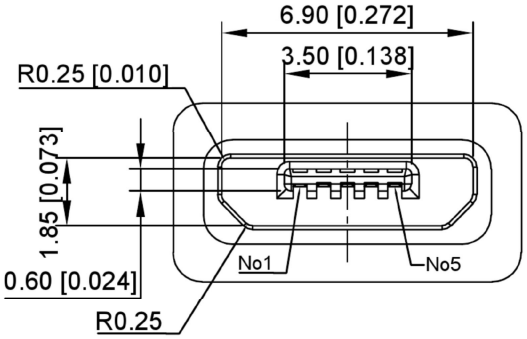

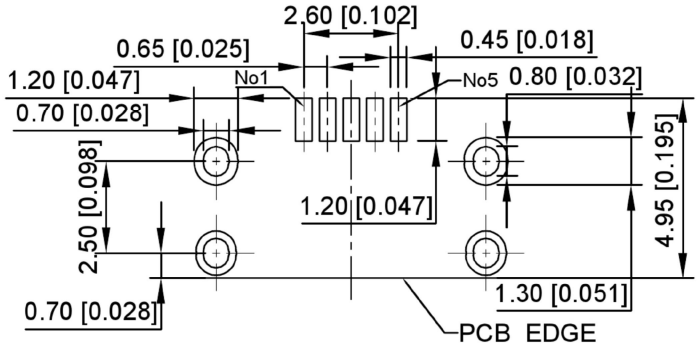

U-E-M8SS-Y-1

1:G/F 4:15u" 5:30u"

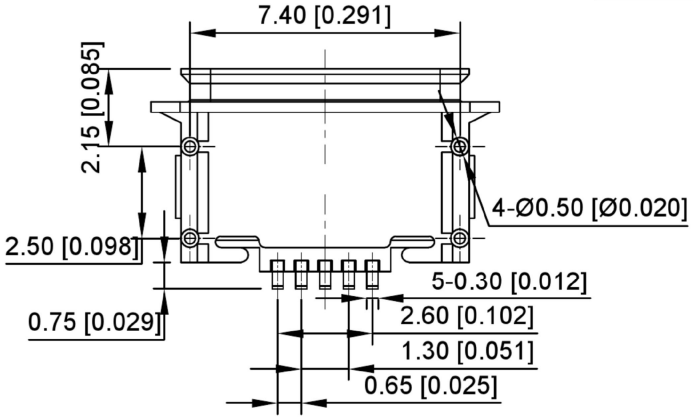

RECOMMENDED PCB LAYOUT
TOLERANCE:±0.03mm
RECOMMEND PCB THICKNESS:0.60mm

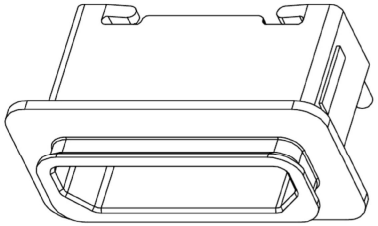

IP-X8

				ANGLAR	±5°
				L≤ 4	±0.2
				4<L≤ 16	±0.3
				16<L≤ 63	±0.4
	DATE	REVISED	APPROVED	L> 63	±0.5
REVISIONS				UNSPECIFIED TOLERANCES	

www.alpsr.com www.gdxjdz.com www.xbswitch.com

DONG GUAN XI BANG ELECTRONIC CO., LTD

DSND		SCALE: N/A	MODEL TYPE: MICRO USB
DWN		VIEW:	PART NO.:
CHKD		UNIT: mm/in	DWG NO.: U-E-M8SS-Y-1
APPD		SIZE: A4	WEIGHT / SHEET 1/1 / REVISION A0