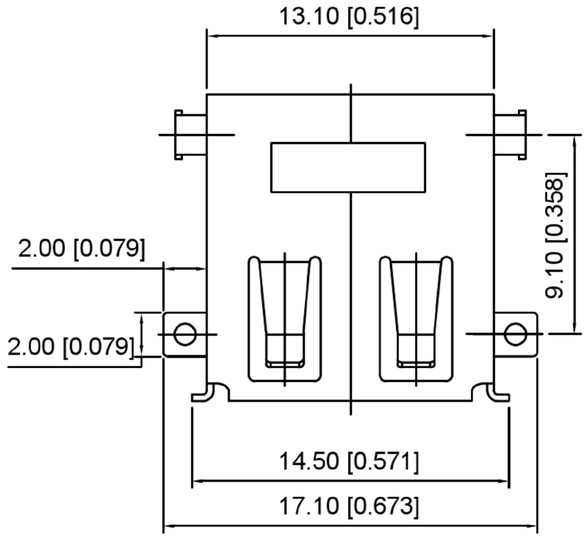

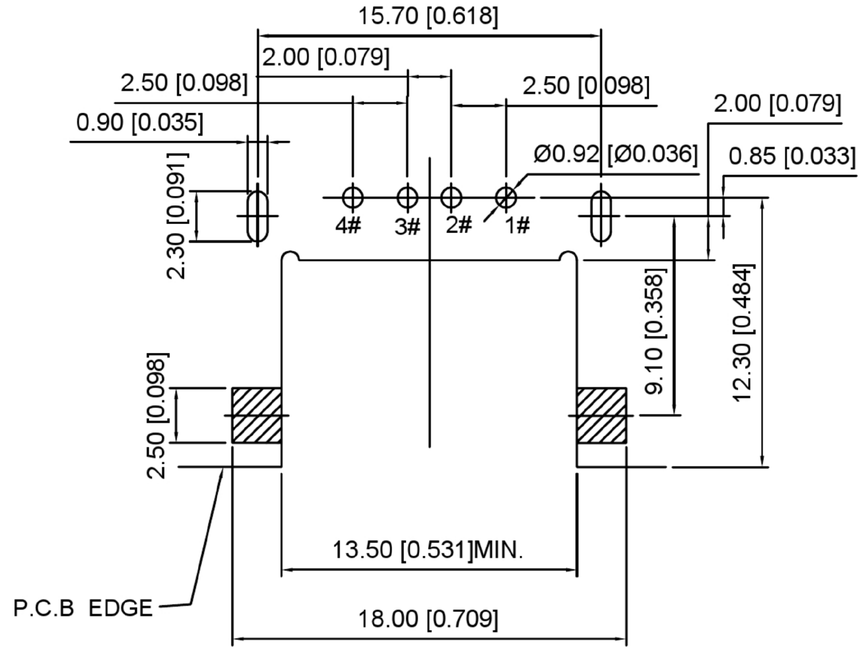

MATERIAL:
Housing Material: PA9T UL94V-0, Black
Contact Terminal: PHOSPHOR BRONZE (t=0.25mm).
Metallic Shell: SUS(t=0.30mm).
FINISH:
CONTACT: UNDER PLATED 50u" MIN. NICKEL ALL OVER 100u" MIN. TIN IN SOLDERING AREA GOLD PLATED IN CONTACT AREA.
SHIELD: N:PLATED WITH 40u" THICKNESS NICKEL OVER 50u" MIN. THICKNESS Cu.

RECOMMENDED P.C.B LAYOUT(THICKNESS=1.2mm)

(COMPONENT SIDE) P.C.B. TOLERANCE:±0.05

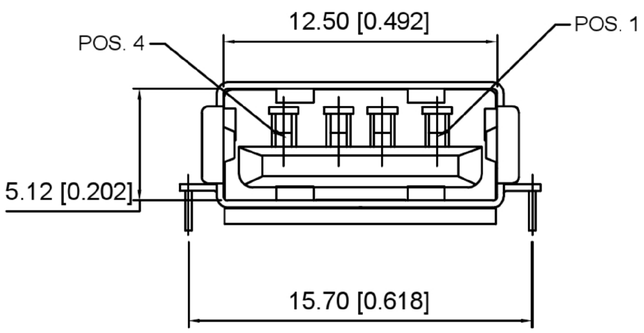

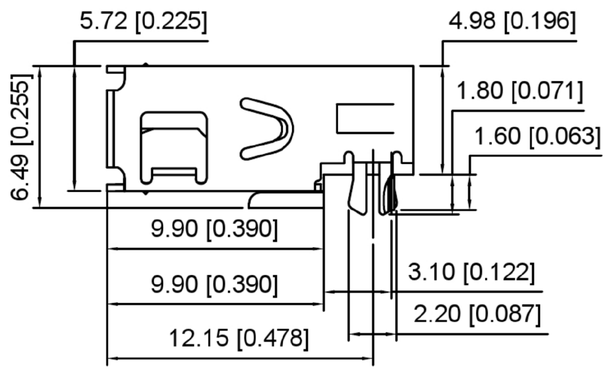

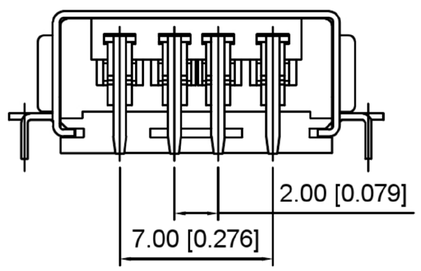

U221-04XN-3BU04-SS

- 1:Au 1U" / 5:Au 15U" / 6:Au 30U"
- 1:PBT / 2:PA6T / 3:PA9T / 4:LCP
- W:WHITE B:BLACK
- S:SUS
- S:Scrolls F:Flat

				ANGLAR	±5°
				L≤ 4	±0.2
				4<L≤ 16	±0.3
				16<L≤ 63	±0.4
	DATE	REVISED	APPROVED	L> 63	±0.5
REVISIONS				UNSPECIFIED TOLERANCES	

www.alpsr.com www.gdxjdz.com www.xbswitch.com

DSND		SCALE: N/A	MODEL TYPE: USB 2.0
DWN		VIEW:	PART NO.:
CHKD		UNIT: mm/in	DWG NO.: U221-04XN-3BU04-SS
APPD		SIZE: A4	

DONG GUAN XI BANG ELECTRONIC CO., LTD

WEIGHT	SHEET	REVISION
	1/1	A0