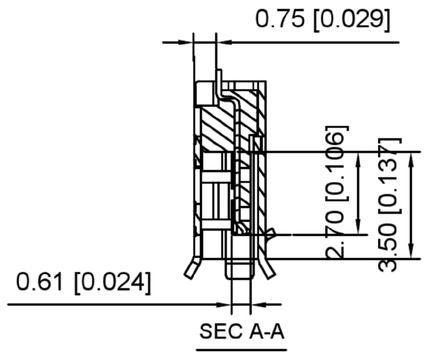

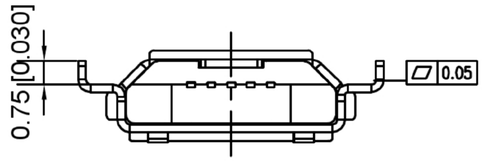

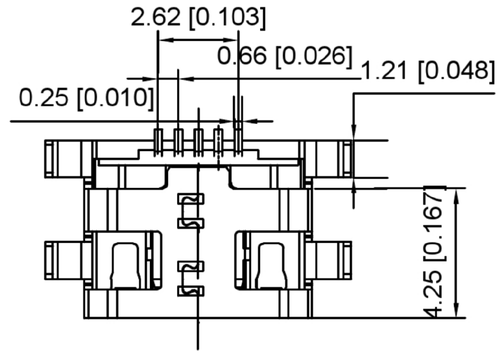

F:Flat

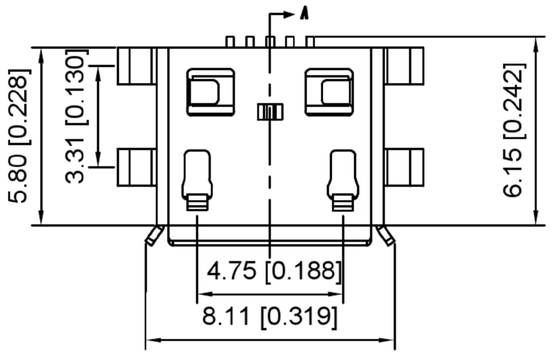

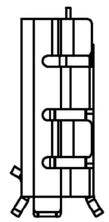

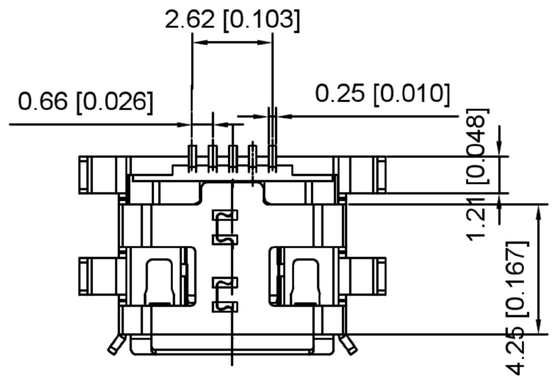

S:Scrolls

Material
Housing Material: LCP, UL94V-0, black
Contact Terminal: Copper Alloy
Metallic Shell: Sus
Electrical
Voltage Rating: 30 V AC
Current Rating: Signal (Pins 2,3,4): 1.0A, Power (Pins 1,5): 1.8A
Contact Resistance: 30mΩ Max
Insulation resistance: 1000MΩ Min
Dielectric withstanding voltage: 250V AC/Minute
Mechanical
Durability: 10,000 cycles
Mating Force: 35N (3.57Kgf) Max
Unmating Force: 8N (0.82Kgf) Min.

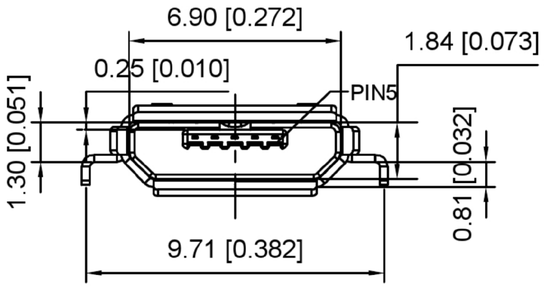

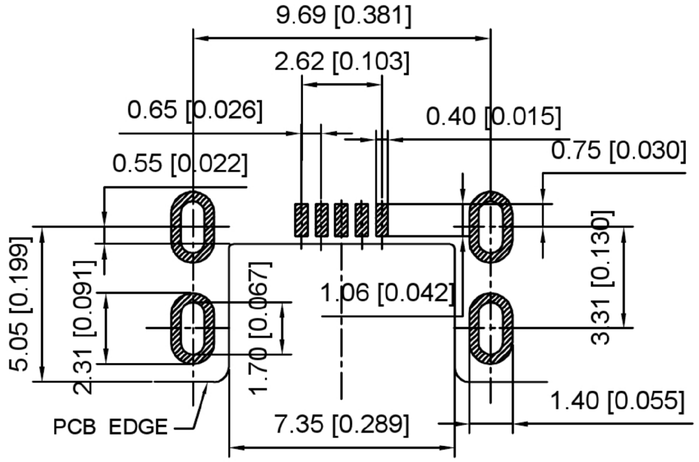

RECOMMANDED PCB LAYOUT

U253-05XX-4BH93-XS
1:AU 1U"
6:AU 30U"
T:TIN
N:NICKEL
S:Sus
S:Scrolls F:Flat

				ANGLAR	±5°
				L≤ 4	±0.2
				4<L≤ 16	±0.3
				16<L≤ 63	±0.4
	DATE	REVISED	APPROVED	L> 63	±0.5
REVISIONS				UNSPECIFIED TOLERANCES	

www.alpsr.com www.gdxjdz.com www.xbswitch.com

DSND		SCALE: N/A	MODEL TYPE: MICRO USB
DWN		VIEW:	PART NO.:
CHKD		UNIT: mm/in	DWG NO.: U253-05XX-4BH93-XS
APPD		SIZE: A4	

DONG GUAN XI BANG ELECTRONIC CO., LTD

WEIGHT	SHEET	REVISION
	1/1	A0