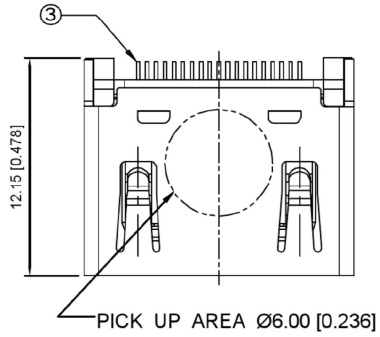

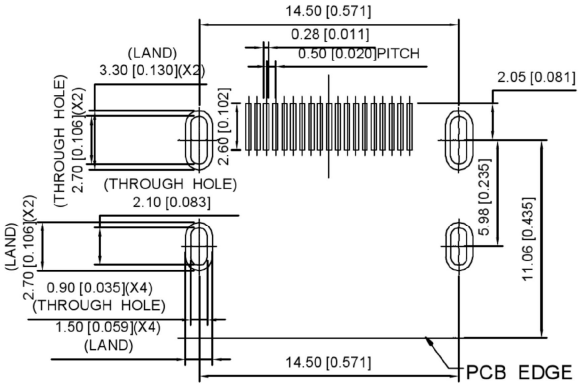

RECOMMENDED P.C.B. LAYOUT (T:1.20~1.60mm)
TOLERANCE UNSPECIFIED ±0.05mm

SPECIFICATIONS

1.OPERATINGCURRENT:0.5A MAX.
2.OPERATION TEMPERATURE:-25℃ TO +85℃
3.DIELECTRICWITHSTANDING VOLTAGE:
500Volts AC BETWEEN ADIACENT TERMINAL(UNMATE)
300Volts AC BETWEEN ADIACENT TERMINAL(MATE)
4.INSULATION RESISTANCE:
100Mohm MIN(UNMATED);10Mohm MIN.(MATED)
5.HDMI SPECIFICATION COMPLIANCE

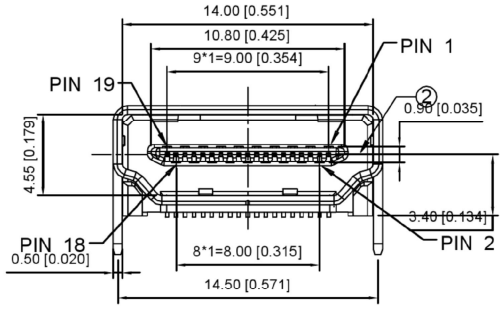

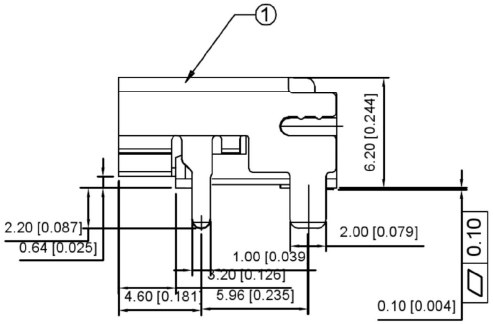

A71-05H5-1X1N1

1:Au 1U"
5:Au 15U"
6:Au 30U"

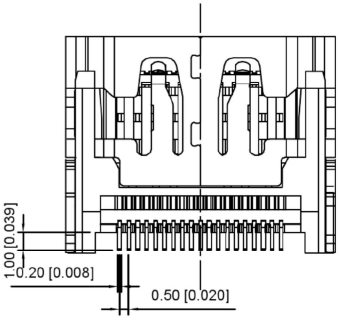

ROHS COMPLIANCE

3	CONTACTS	19	COPPER ALLOY,GOLD PLATED OVER NICKEL ON CONTACT AREA AND 100u" MIN.TIN PLATED OVER NICKEL ON SOLDER TAILS
2	HOUSING	1	THERMOPLASTIC UL94V-0
1	SHELL	1	COPPER ALLOY, NICKEL PLATED

				ANGLAR	±5°
				L≤ 4	±0.2
				4<L≤ 16	±0.3
				16<L≤ 63	±0.4
	DATE	REVISED	APPROVED	L> 63	±0.5
REVISIONS				UNSPECIFIED TOLERANCES	

www.alpsr.com www.gdxjdz.com www.xbswitch.com

DSND		SCALE: N/A	MODEL TYPE: HDMI CONNECTOR
DWN		VIEW:	PART NO.: A71-05H5-1X1N1
CHKD		UNIT: mm/in	DWG NO.: A71-05H5-1X1N1
APPD		SIZE: A4	

DONG GUAN XI BANG ELECTRONIC CO., LTD

WEIGHT	SHEET	REVISION
	1/1	A0