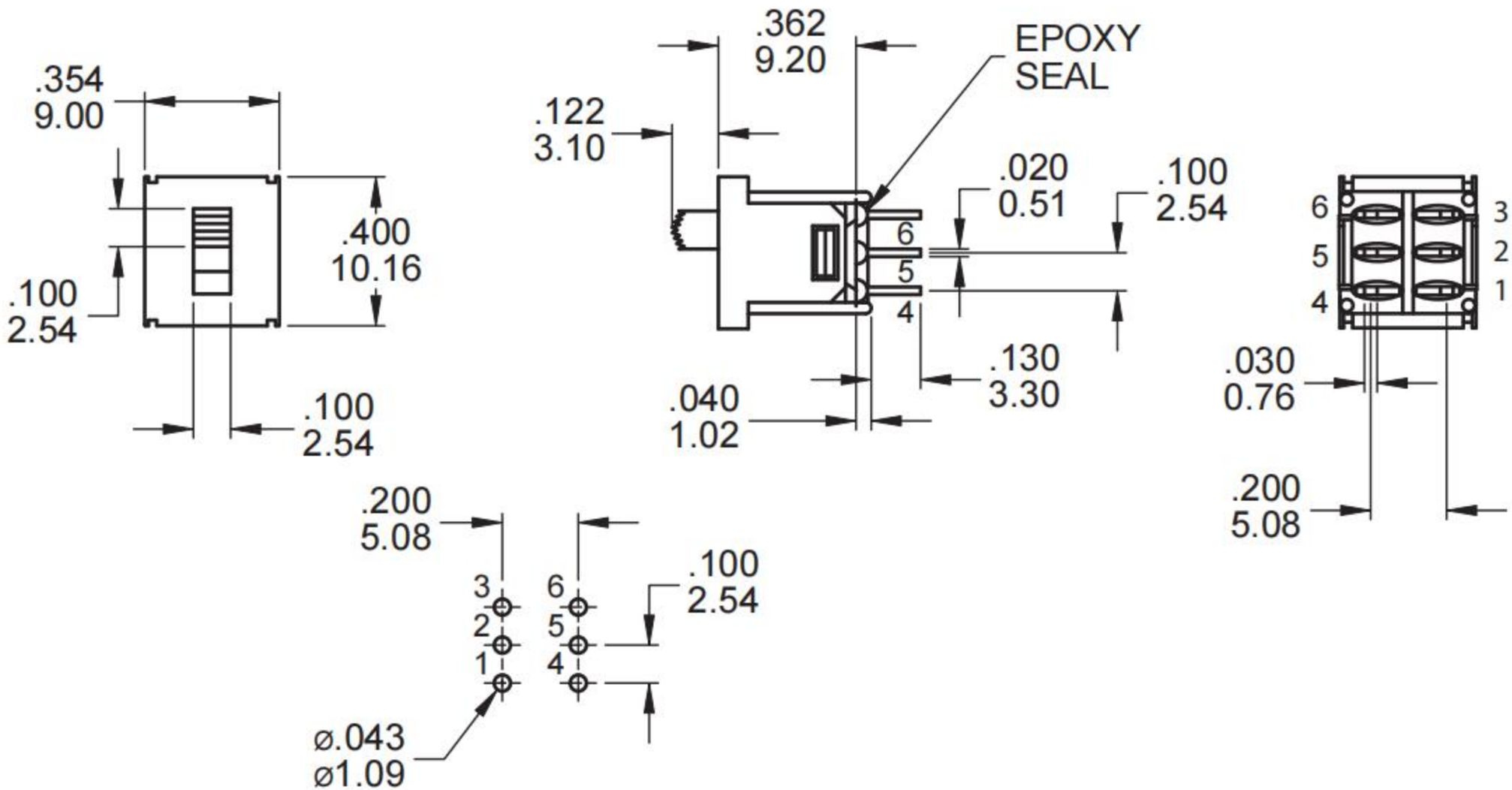

P.C. MOUNTING

"*"表示关键尺寸（9个）

NO.	PART NAME	MATERIAL	QTY	FINISHING
9	TUBE SLEEVE	ALUMINUM	1	SILVER WHITE
8	SPRING	SUS	2	
7	POSITION PLATE	BRASS	1	Ag-Plated
6	SPRING PLATE	PBS	2	Ag-Plated
5	COVER	SUS	1	WASHING
4	CONTACT FOOT	BRASS	6	Ag-Plated
3	BAR	PA66	2	WHITE
2	KONB	PA66	1	BLACK
1	CASE	PA9T	1	RED

TOLERANCE UNLESS SPECIFIED

UP TO 5mm: ±0.1
ABOVE 5mm: ±0.2
ANGULAR ±1°

NO	DATE	REVISIONS	BY	APPD

TITLE: VERTICAL SLIDE SWITCH
MODEL: XB-SS-22D30L
UNIT : MM
SCALE: 1:1
ROHS COMPLIANT

DWN	ZENQ. CHEN	2014-12-20
CHK'D	PONG. DONG	2014-12-20
APPD	LIANG. WU	2014-12-20

东莞市溪榜电子有限公司
DONG GUAN XI BANG ELECTRONI CS CO., LTD.

PRO.AGL:
REV : A