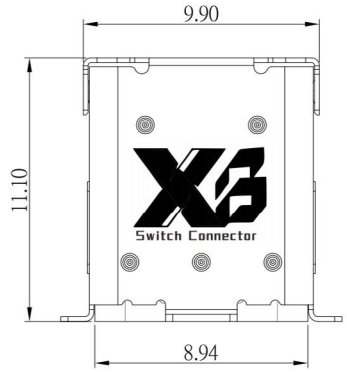

SBC-240S35-45x-S338

鍍層厚度

1 : 3u"
2 : 15u"
3 : 30u"

USB TYPE-C FULL-FEATURED RECEPTACLE INTERFACE PIN ASSIGNMENTS

PIN	Signal Name	Description	PIN	Signal Name	Description
A1	GND	Ground return	B12	GND	Ground return
A2	SSTXp1	Positive half of firs SuperSpeed TX differential pair	B11	SSRXp1	Positive half of firs SuperSpeed RX differential pair
A3	SSTXn1	Negative half of first SuperSpeed TX differential pair	B10	SSRXn1	Negative half of first SuperSpeed RX differential pair
A4	VBUS	Bus Power	B9	VBUS	Bus Power
A5	CC1	Configuration Channel	B8	SBU2	Sideband Use(SBU)
A6	Dp1	Positive half of the USB 2.0 differential pair=Position 1	B7	Dn2	Negative half of the USB 2.0 differential pair=Position 2
A7	Dn1	Negative half of the USB 2.0 differential pair=Position 1	B6	Dp2	Positive half of the USB 2.0 differential pair=Position 2
A8	SBU1	Sideband Use(SBU)	B5	CC2	Configuration Channel
A9	VBUS	Bus Power	B4	VBUS	Bus Power
A10	SSRXn2	Negative half of second SuperSpeed RX differential pair	B3	SSTXn2	Negative half of second SuperSpeed TX differential pair
A11	SSRXp2	Positive half of second SuperSpeed RX differential pair	B2	SSTXp2	Positive half of second SuperSpeed TX differential pair
A12	GND	Ground return	B1	GND	Ground return

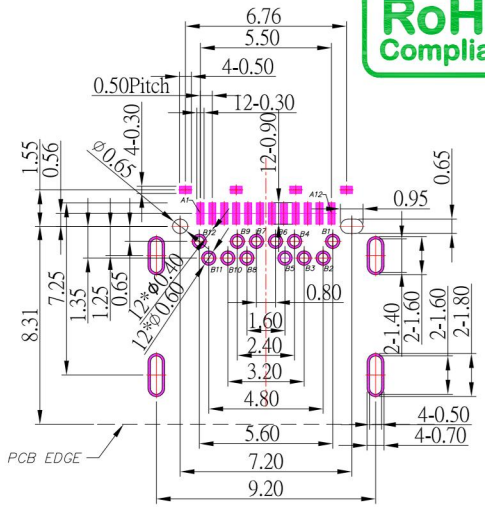

RoHS Compliant

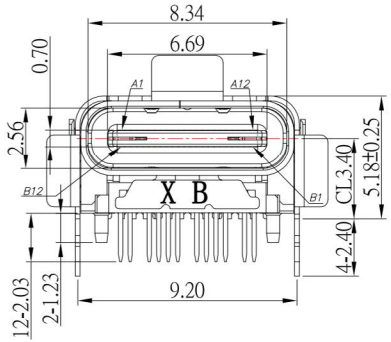

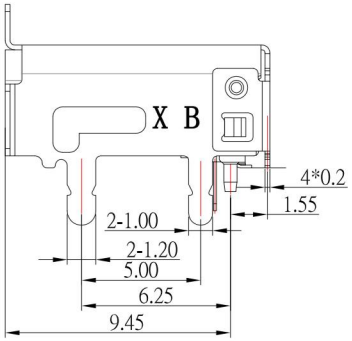

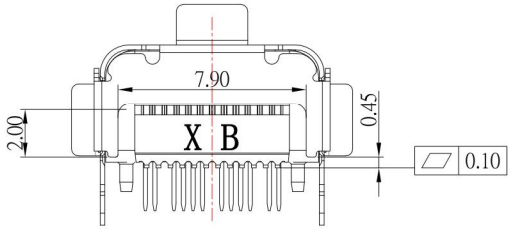

P.C.B LAYOUT MOUNTING PATTERN

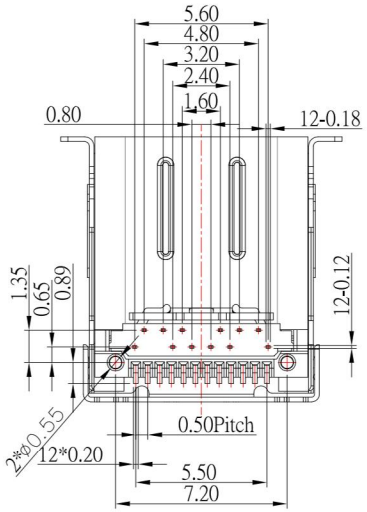

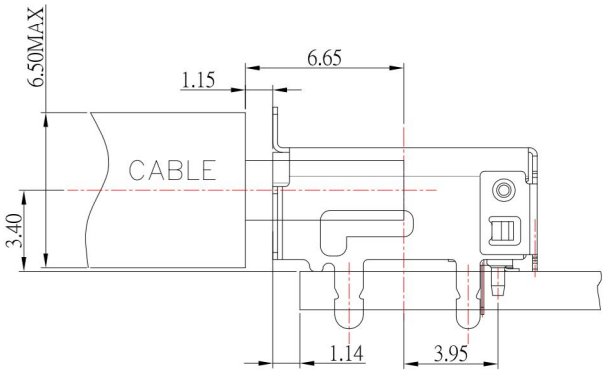

SPECIFICATIONS

Electrical:

1. Rating: 20V , 5.0A
2. Contact Resistance: 40 mΩ Max
3. Insulation Resistance: 100 MΩ Min
4. Dielectric Withstanding Voltage: 100V AC

Mechanical:

1. Connector Mate and Unmate Force
   - 1.1 Mate force: 5~20 N
   - 1.2 Unmate force: 8~20 N

Material:

1. Housing: LCP
2. Contact: C7025
3. Shell: SUS

Finish:

1. Contact: Plated Gold in Mating Area ;
   Tin Plated on Solder Balls ;
   Nickel under plated overall
2. Shell: Nickel under Plated surface layer

ITEM NO.	DESCRIPTION	DRAWN	DATE

东莞市溪榜电子有限公司
DONG GUAN XI BANG ELECTRONI CS CO., LTD.

TOLERANCE UNLESS OTHERWISE STATED : Up to 5 ±0.2; Above 5 ~ 15 ±0.3; Above 15 ~ 30 ±0.4; Above 30 ~ 50 ±0.5; Angle ±0.3°

3RD. ANGEL'S | UNITS | MM

DRAWN BY: Jack Lu	DATE 03/17/23	MAT'L		TITLE	CONNECTOR
CHECKED BY: Jacky Chen	DATE 03/17/23	FINISH		MODLE	USB4 TYPE CF 板上墊高 CL 3.4外殼四腳插板 SMT腳+PIN腳 L11.10 GEN 3X2
APPROVED BY: Tony Kao	DATE 03/17/23	SCALE	1 : 1	DWG NO.	SBC-240S35-45x-S338
		SHEET NO.	1 of 1	PART NO.	SBC-240S35-45x-S338

SIZE A4 | VER R