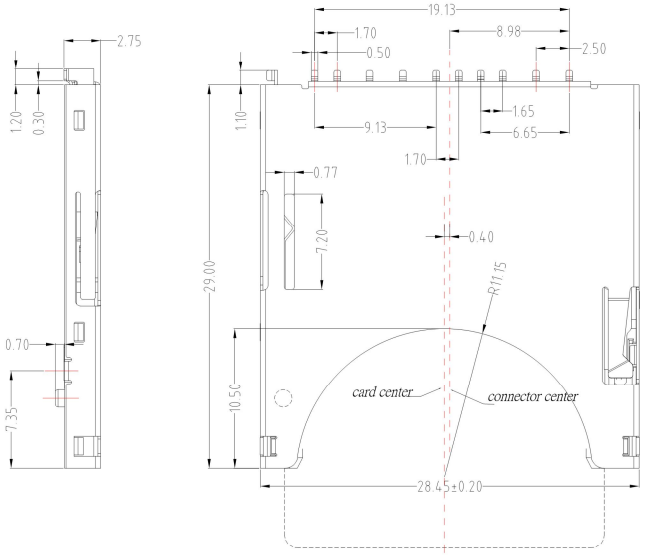

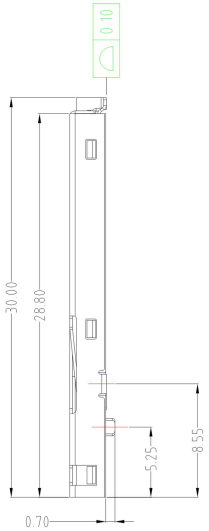

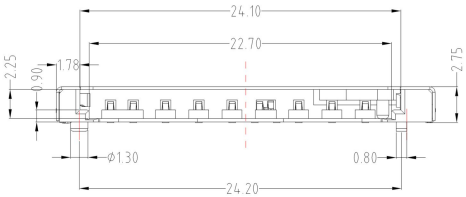

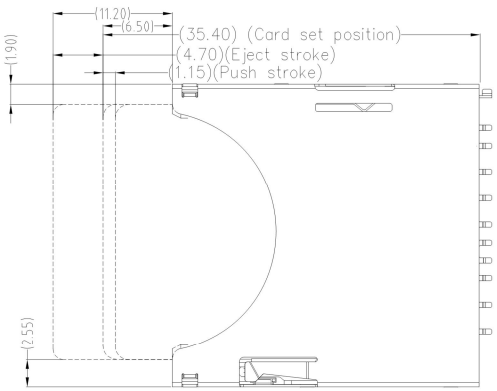

Pin No.		SD	MMC
P1	MMC-DAT SD-DAT3	1P	7P
P2	MMC-CMD SD-CMD	2P	2P
P3	MMC-VSS1 SD-VSS1 接地	3P	3P
P4	MMC-VDD SD-VDD	4P	4P
P5	MMC-CLK SD-CLK	5P	5P
P6	MMC-VSS2 SD-VSS2 接地	6P	6P
P7	MMC-DAT SD-DAT0	7P	1P
P8	SD-DAT1	8P	
P9	SD-DAT2	9P	

SPECIFICATION

Electrical :

1.Current Rating: 0.5mA AC / DC Max

2.Voltage Rating: 125V AC / DC

3.Contact Resistance: 100 mΩ Max.

4.Insulation Resistance: 1,000 MΩ Min.

Environmental:

1.Operating Temperature: -20˚C ~ +90˚C.

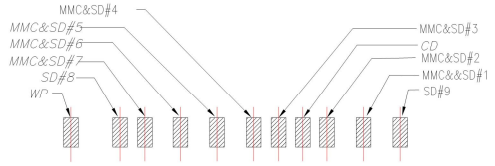

RoHS Compliant

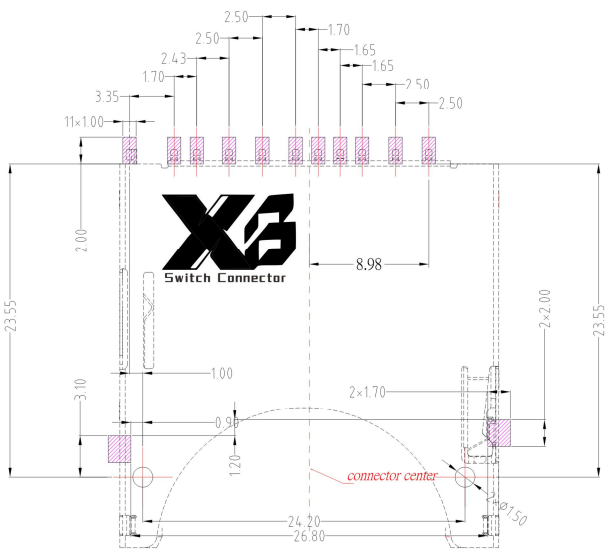

PCB LAYOUT

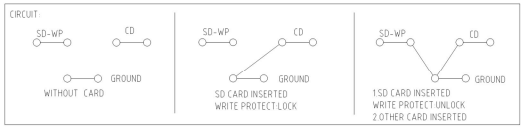

Material:

1.Housing: LCP,Black

2.Contact: Phosphor Bronze

3.Shell: SUS

Finish:

1.Contact: Plated Gold in Mating Area ;

Tin Plated on Solder Balls ;

Nickel under plated overall

2.Shell: Nickel under Plated surface layer

ITEM NO.	DESCRIPTION	DRAWN	DATE
2	更新圖面	Jack	062419
1	更新圖面	Jack	081018

东莞市溪榜电子有限公司

DONG GUAN XI BANG ELECTRONI CS CO., LTD.

Switch Connector

TOLERANCE UNLESS OTHERWISE STATED : Up to 5 ±0.2; Above 5 ~ 15 ±0.3; Above 15 ~ 30 ±0.4; Above 30 ~ 50 ±0.5; Angle ±0.3°

3RD. ANGEL'S

UNITS MM

DRAWN BY: Jack Lu	DATE 06/24/19	MAT'L		TITLE	CONNECTOR
CHECKED BY: Jacky Chen	DATE 06/24/19	FINISH		MODLE	CARD CONNECTOR
APPROVED BY: Tony Kao	DATE 06/24/19	SCALE	1 : 1	DWG NO.	SD-001-001-S267
		SHEET NO.	1 of 1	PART NO.	SD-001-001-S267

SIZE A4 VER R2