Product NO.	XB-801-0002			
REV	DESCRIPTION	DWN	DATE	APPROVEN
A	First issue	JIM	2012/11/02	John kine

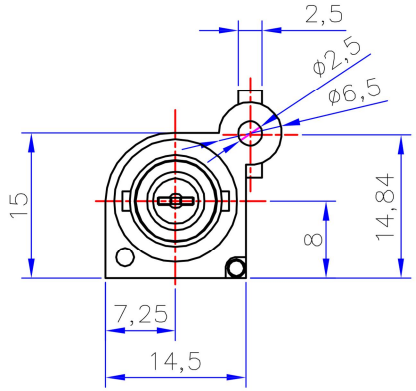

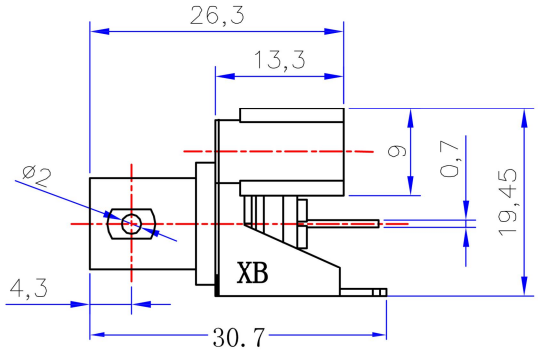

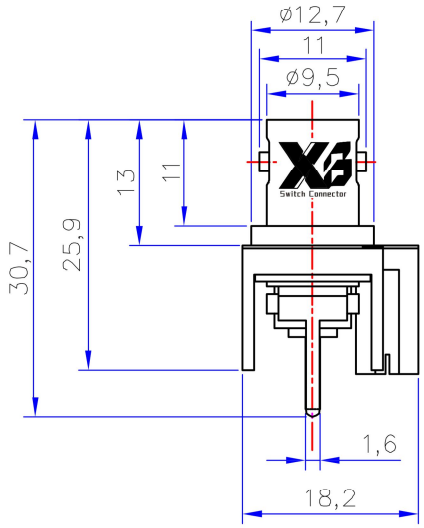

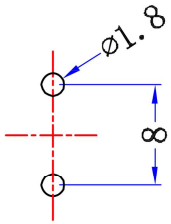

PCB

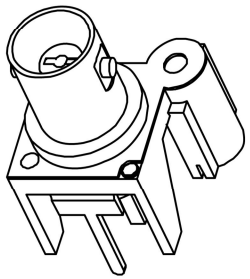

NO	DESCRIPTION	MATERIAL	FINISH	QTY
5	Solder column	Iron	NICKEL	1
4	IRON PLATES	Iron	NICKEL	1
3	PANEL	ABS	BLACK	1
2	PIN	BRASS	NICKEL	1
1	BODY	ZINC	NICKEL	1

NOTE:

DRAWN Zelin. Zhang	2012/11/10	Tolerance	0-6 ±0.05 6-30 ±0.10 30-120 ±0.20 Angular ±2°
CHECKED		View	
		UNIT	MM
APPROVALS John Kine	12/04.2012	SCALE	1:1

东莞市溪榜电子有限公司
Switch Connector DONG GUAN XI BANG ELECTRONICS CO.,LTD

Name: XB-801-0002		
SIZE A	Product NO.	REV B
DateTime 2012/11/02	CAD FILE D/company drawings/BD	SHEET: 1 OF 1