Product NO.	XB-801-0116			
REV	DESCRIPTION	DWN	DATE	APPROVEN
A	First issue	Mr.wang	2012/11/02	John kine
B				

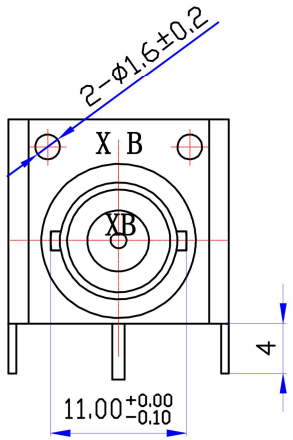

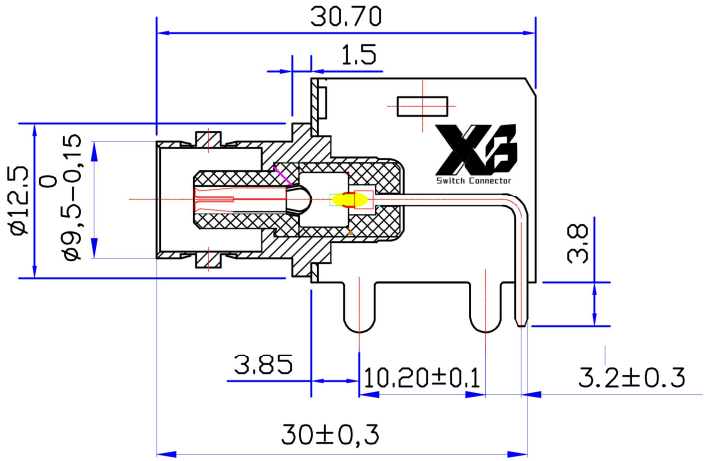

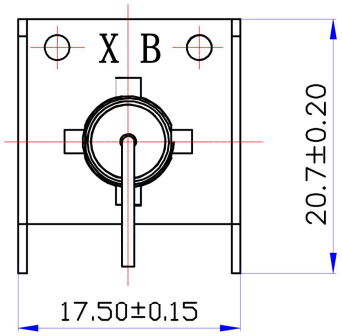

Specification:

Impedance: 50 Ohms
VSWR:1.3MAX
Frequency range:DC~4G
Working Voltage:500V rms @ sea level
Insulation resistance:5000 Ohms min
Temperature range:-55℃ TO +155℃
Relative temperature:≤95%(40° C±2° C)
Drawings products are in line with ROHS standards

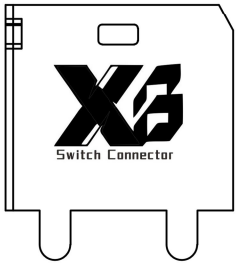

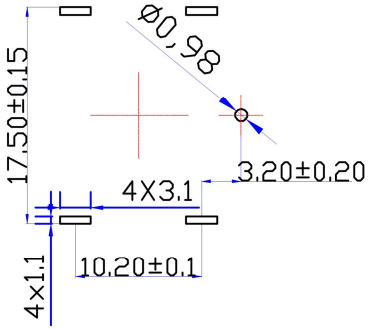

NO	Component Number	Material	Finish
1	Body	Zinc	NICKEL
2	Center contact	Brass	COLD
3	Insulator	POM	White
4	BRACKET	Iron	NICKEL
5			
6			
7			
8			
9			
10			

NOTE:

DRAWN	Zelin.CHEN
CHECKED	
APPROVALS	

Tolerance	X. ±0.15 X.X ±0.10 X.XX ±0.05 Angular ±5°
View	
UNIT	MM
SCALE	1:1

东莞市溪榜电子有限公司
DONG GUAN XI BANG ELECTRONICS CO.,LTD

Name:	BNC Jack PCB Mount		
SIZE B	Product NO. XB-801-0116		REV A
DateTime 2016/10/28	CAD FILE D/company drawings/BD		SHEET: 1 OF 1