Product NO.	XB-806-0020			
REV	DESCRIPTION	DWN	DATE	APPROVEN
A	First issue	JIM	2010/02/03	John kine

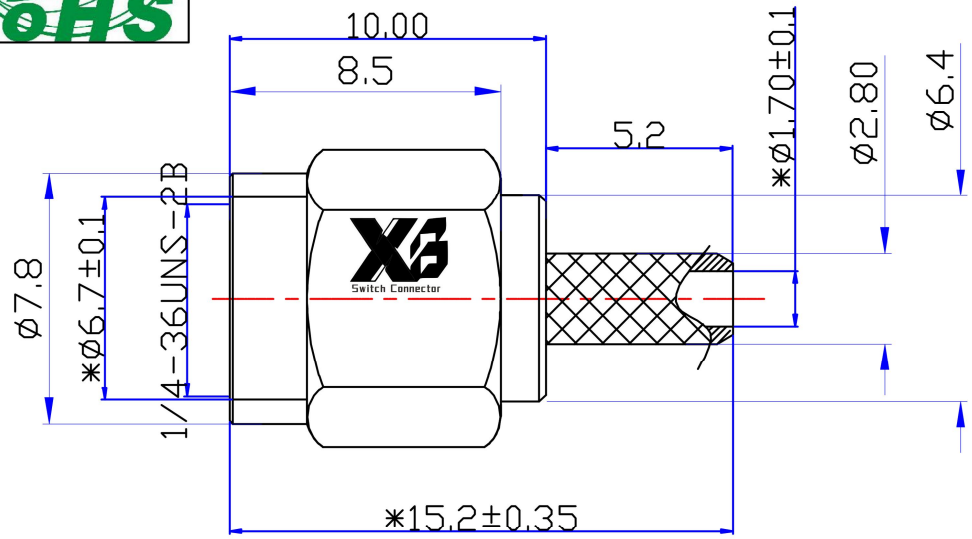

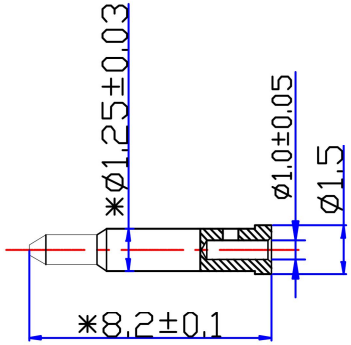

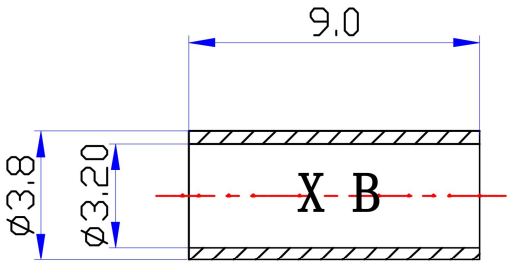

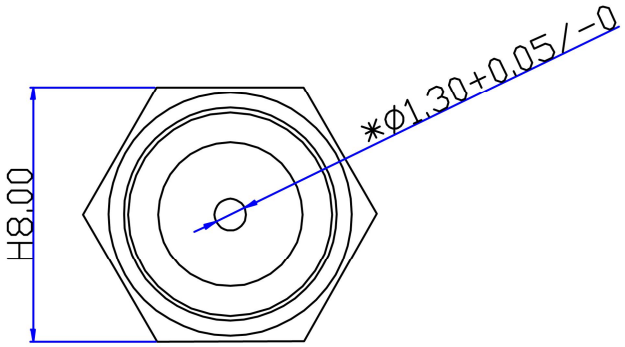

Specification.

VSWR:1.3MAX

Frequency range:DC~3G

Working Voltage:500V rms @ sea level

Insulation resistance:5000 Ohms min

Temperature range:-55℃ TO +155℃

Relative temperature:≤95%(40° C±2° C)

Drawings products are in line with ROHS standards.

NO	Component Number	Material	Finish	QTY
1	BODY	Brass	GOLD 2U"	1
2	CONTACT	Brass	GOLD 3U"	1
3	Insulator	POM	——	1
4	Casing	Brass	Nickel 50U"	1
5				
6				
7				
8				
9				
10				

NOTE:

DRAWN	Zelin. Zhang	2012/04/10	
CHECKED			
APPROVALS	John	12/04.2012	

Tolerance	0-6 ±0.2 6-30 ±0.3 30-120 ±0.5 Angular ±2°
View	
UNIT	MM
SCALE	1:1

东莞市溪榜电子有限公司
Switch Connector DONG GUAN XI BANG ELECTRONICS CO.,LTD

Name: SMA MALE FOR RG179CABLE CONNECTOR

SIZE	Product NO.	REV
A	XB-806-0020	A

DateTime	CAD FILE	SHEET
2012/04/10	D/company drawings/BD	1 OF 1