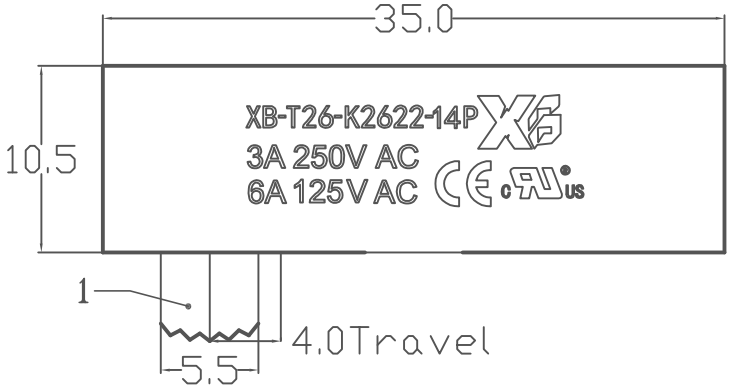

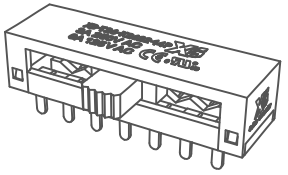

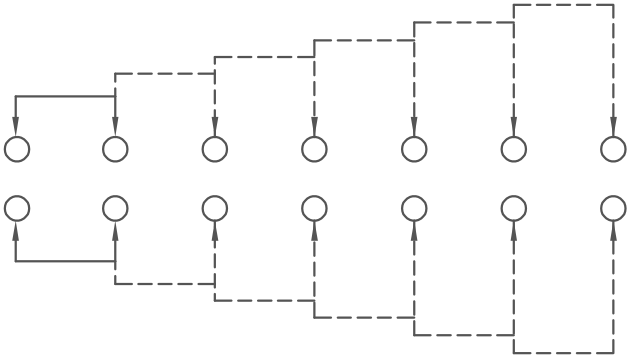

SCHEMATIC (NON-SHORTING)

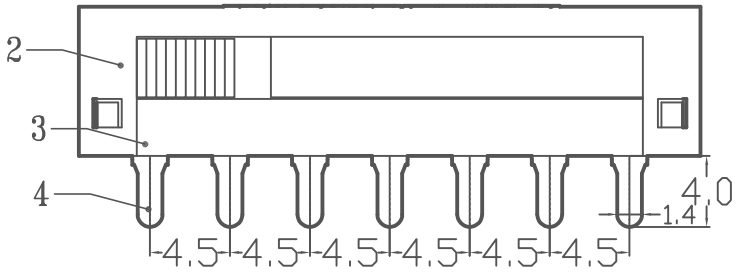

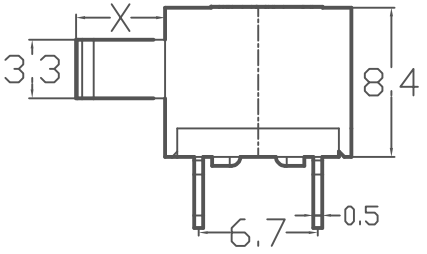

SPECIFICATIONS

Rating	3A 250V AC;6A 125 AC
FUNCTION	2P-6T
Contact Resistance	200MΩ Max
Insulation Resistance	100MΩ Min
Operating Force	250gf±100gf
Operating Life	10,000cycle

Model No	X(mm)
XB-T26-K2622-14P-G2	2mm
XB-T26-K2622-14P-G3	3mm
XB-T26-K2622-14P-G4	4mm
XB-T26-K2622-14P-G5	5mm
XB-T26-K2622-14P-G6	6mm
XB-T26-K2622-14P-G7	7mm
XB-T26-K2622-14P-G8	8mm
XB-T26-K2622-14P-G9	9mm
XB-T26-K2622-14P-G10	10mm

NO	PARTS	MATERIALS	Q'TY	FINISH
7	STEEL BALL	STEEL	1	NATURAL
6	SPRING	STEEL WIRE	1	NATURAL
5	CONTACT	BRASS	1	Ag PLATED
4	TERMINAL	BRASS	14	Ag PLATED
3	CASE	PA66	1	BLACK
2	COVER	PA66	1	BALCK
1	KNOB	PA66	1	BALCK

ITEM NO.	DESCRIPTION	DRAWN	DATE
6	新增Rating选项		
5	更新样式		
4	更新Rating		
3	更新Rating		
2	新增SPEC		
1	更新图面		

东莞市溪榜电子有限公司
DONG GUAN XI BANG ELECTRONI CS CO., LTD.

TOLERANCE UNLESS OTHERWISE STATED: Up to 5 ±0.2; Above 5 ±0.3; Above 15 - 30 ±0.4; Above 30 - 50 ±0.5; Angle ±0.3°

3RD. ANGEL'S

UNITS MM

DRAWN BY: PENG GAO	DATE 01/29/24	MAT'L	
CHECKED BY: ZENG CHEN	DATE 01/29/24	FINISH	
APPROVED BY: ZENG CHEN	DATE 01/29/24	SCALE	1:1
		SHEET NO.	1 of 1

TI'TLE			
MODLE			
DWG NO.	XB-T26-K2622-14P	SIZE	A4
PART NO.	XB-T26-K2622-14P	VER	