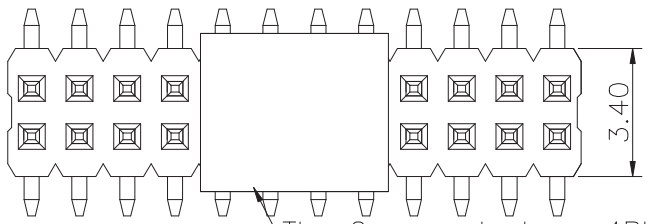

The Cap used above 4PIN
2,3pins with tape&reel packing

Specifications
Current Rating:1.0Amp
Insulation Resistance:1000MΩMin.
Dielectric Withstanding Voltage:300VAC
Contact Resistance:20mΩMax.
Operating Temperature:−40°C to +105°C
Materials
Contact Material:Brass
Insulator Material:High Temperature Thermoplastic, UL 94V−0 LCP or the equivalent material
All materials must meet hazardous substances control standards.

XI BANG

Recommended P.C.Board Layout
(Tolerance:±0.05)

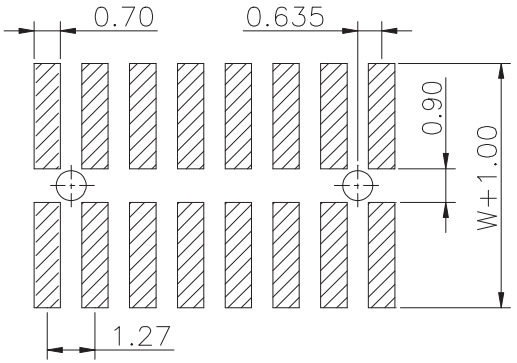

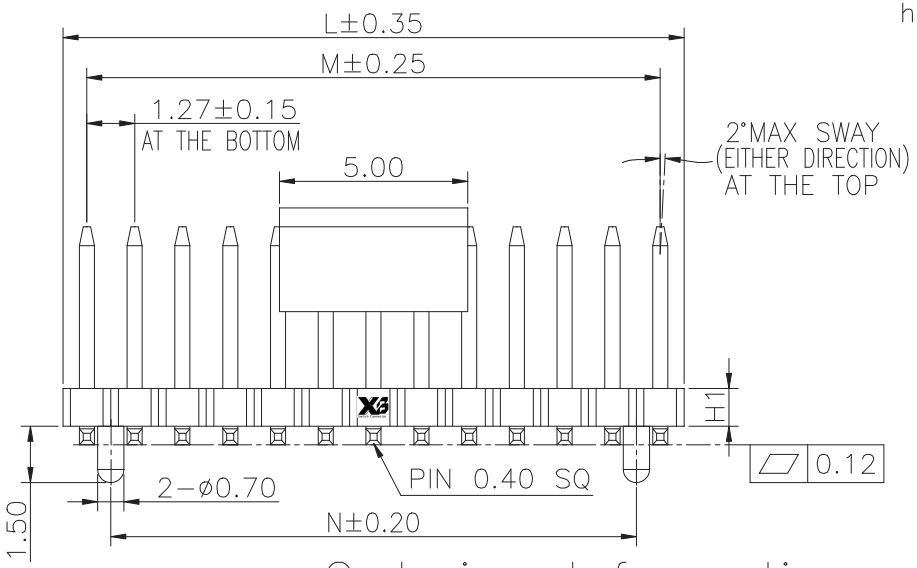

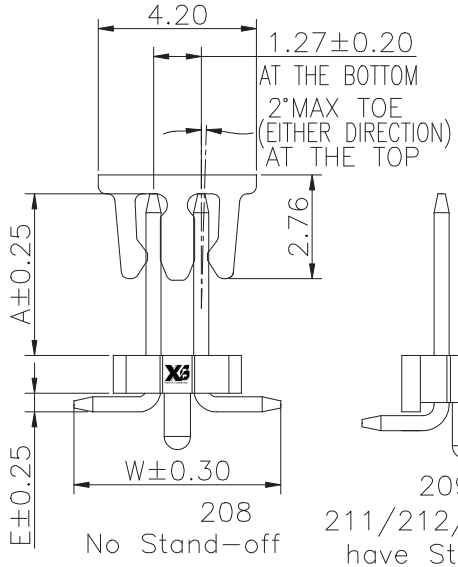

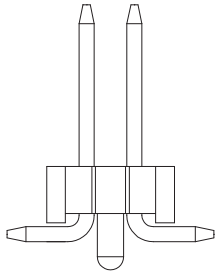

209/210/
211/212/213/214
have Stand−off

No. of PIN/ROW	Dimension Information			No. of PIN/ROW	Dimension Information		
	L	M	N		L	M	N
02	2.54	1.27		27	34.29	33.02	31.75
03	3.81	2.54	1.27	28	35.56	34.29	33.02
04	5.08	3.81	2.54	29	36.83	35.56	34.29
05	6.35	5.08	3.81	30	38.10	36.83	35.56
06	7.62	6.35	5.08	31	39.37	38.10	36.83
07	8.89	7.62	6.35	32	40.64	39.37	38.10
08	10.16	8.89	7.62	33	41.91	40.64	39.37
09	11.43	10.16	8.89	34	43.18	41.91	40.64
10	12.70	11.43	10.16	35	44.45	43.18	41.91
11	13.97	12.70	11.43	36	45.72	44.45	43.18
12	15.24	13.97	12.70	37	46.99	45.72	44.45
13	16.51	15.24	13.97	38	48.26	46.99	45.72
14	17.78	16.51	15.24	39	49.53	48.26	46.99
15	19.05	17.78	16.51	40	50.80	49.53	48.26
16	20.32	19.05	17.78	41	52.07	50.80	49.53
17	21.59	20.32	19.05	42	53.34	52.07	50.80
18	22.86	21.59	20.32	43	54.61	53.34	52.07
19	24.13	22.86	21.59	44	55.88	54.61	53.34
20	25.40	24.13	22.86	45	57.15	55.88	54.61
21	26.67	25.40	24.13	46	58.42	57.15	55.88
22	27.94	26.67	25.40	47	59.69	58.42	57.15
23	29.21	27.94	26.67	48	60.96	59.69	58.42
24	30.48	29.21	27.94	49	62.23	60.96	59.69
25	31.75	30.48	29.21	50	63.50	62.23	60.96
26	33.02	31.75	30.48				

Ordering Information

2XX − XX XX B XXX C 1 Z X

- 2XX: Plastic specifications
  1=Single row
  2=Dual row
  3=Tripe row
  4=Quadruple
- XX: Water code
  08:H1=1.00
  09:H1=1.50
  10:H1=1.70
  11:H1=2.00
  12:H1=2.50
  13:H1=2.70
  14:H1=3.00
- XX: No. of Pins per Row 02~50
- XX: Plating code
  01=Tin
  02=Gold Flash
  05=Gold Flash/Tin
  22=Matte Tin
- B: Positioning column information
  A=No locating post
  B=Round post
  C=Square post
- XXX: Pin length See the drawing
- C: Insulator Material
  R=Nylon(Halogen Free)
  C=LCP
- 1: Color
  1=Black
  2=White
  3=Yellow
  E=Beige
- Z: Contact Material
  A/S/K/T=Phosphor Bronze
  B/Z/H/W=Brass
- X: Packing code
  A=Box
  B=Tray
  C=Tube
  D=Tape&Reel
  E=Cap+Tube
  F=Cap+Tape&Reel
  G=Acetate Tape+Tube
  H=Acetate Tape+Tape&Reel

东莞市溪榜电子有限公司
DONG GUAN XI BANG ELECTRONI CS CO., LTD.
Switch Connector

REV.	UNIT.	SCALE.	PAGE.
01	mm	5:1	1/1

GENERAL TOLERANCE	
X.°±5.0°	X.±0.30
.X°±3.0°	.X±0.25
.XX°±2.0°	.XX±0.15
.XXX°±1.0°	.XXX±0.10

DWG. NO. XB-PZ-C-127-208

PART NO.

TITLE. 1.27 PIN HEADER DUAL ROWS SMT TYPE CONNECTOR