Notes:

Insulator: Glass filled Polyester UL 94V-0
Contact: Copper alloy
Shell: Steel, Tin plated as standard

Coaxial terminal
Insulator: Teflon UL 94V-0
Color white
Contact: Brass
* For Lead Free Wave Flow Process

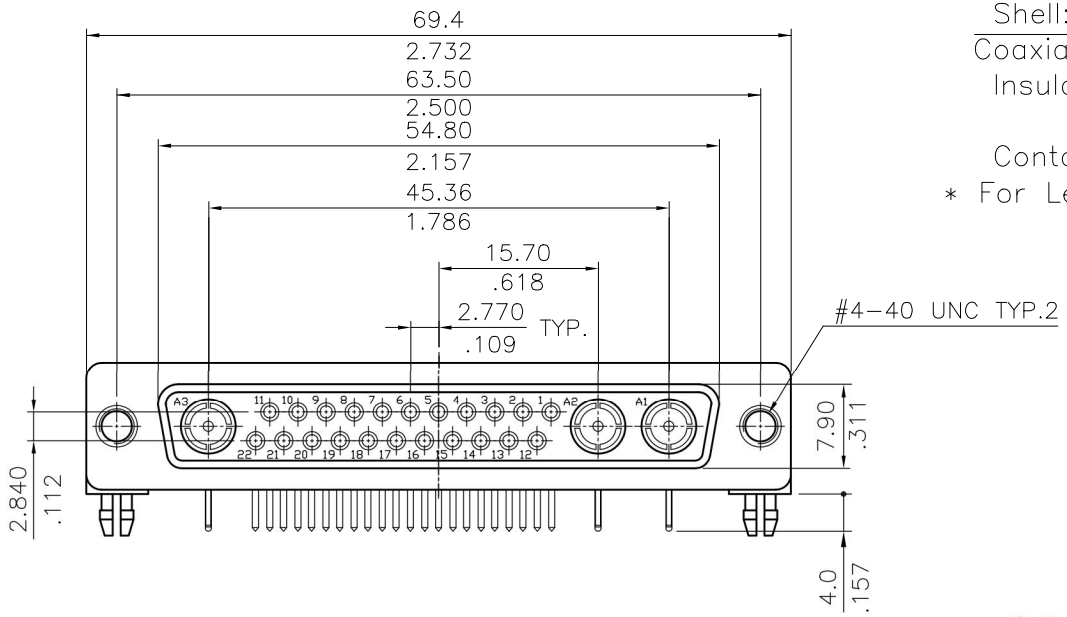

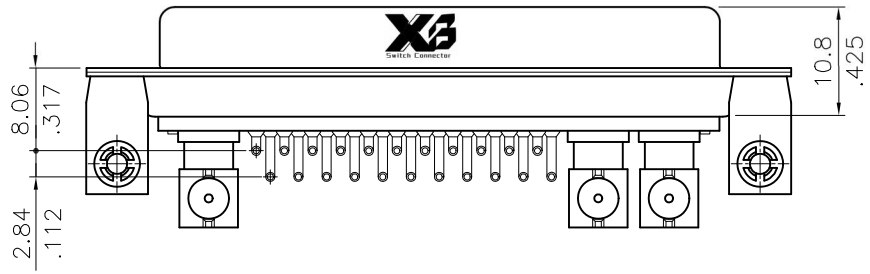

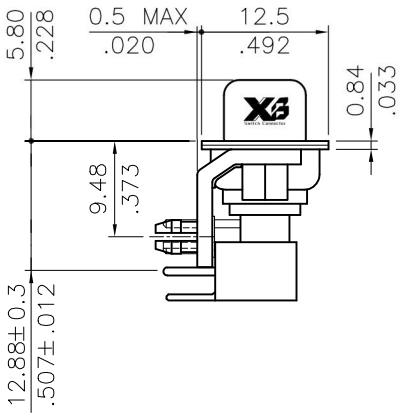

Lead Free Process

RoHS Compliant

SYM	NAME	DATE	REVISIONS
4			
3			
2			
1	Karen	4/18-17'	ECNT117049/ECRT117003

		DATE
DRAWN BY:	Karen	4/20-17'
ENGINEER:	Sun	4/21-17'
CHECKED BY:	Eisley	4/21-17'
APPROVED BY:	Eisley	4/21-17'

UNIT: mm / inch

TOLERANCE UNLESS OTHERWISE SPECIFIED

.X ± 0.30/.012	X.° ± 1°
.XX ± 0.20/.008	.X° ±
.XXX ± 0.10/.004	.XX° ±

TITLE: 25W3 COAXIAL FEMALE D-SUB CONNECTOR (RIGHT ANGLE PCB MOUNT TYPE)

MATERIAL:

FINISH:

东莞市溪榜电子有限公司
DONG GUAN XI BANG ELECTRONI CS CO., LTD.

DRAWING NO.	25W306SC	PART NO.	25W3SCH********
SCALE	2 / 1	SHEET 1 OF 2	

Ordering Code

25W3	S	C	H	3	2	1	75	I10
①	②	③	④	⑤	⑥	⑦	⑧	⑨

① Series No.
② Connector Type: S= Receptacle
③ Contact type: C= Coaxiai Contact
④ Contact tail style: H= Right Angle Dip type
⑤ Coaxial contact plating:
2= Gold flash plated over Nickel
3= 15μ" Gold plated over Nickel
4= 30μ" Gold plated over Nickel
5= 50μ" Gold plated over Nickel
⑥ Signal contact plating:
2= Gold flash plated over Nickel
3= 15μ" Gold plated over Nickel
4= 30μ" Gold plated over Nickel
⑦ Insulator color: 1= Black, 6= Green
⑧ Performance: 50= 50Ω, 75= 75Ω
⑨ Mounting Style:
000= With ø3.05mm holes on shell
B00= Riveted #4-40 UNC open nuts on front shell
C00= Riveted #4-40 UNC open nuts on rear shell
I00= Riveted #4-40 UNC ground tabs with ø3.2mm holes
I10= Riveted #4-40 UNC ground tabs with board locks(standard)

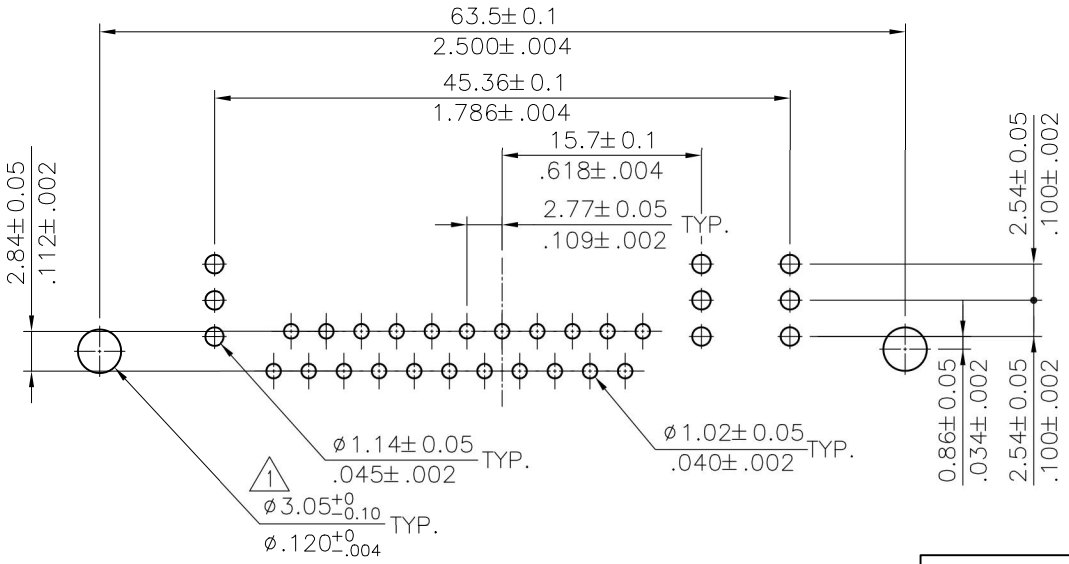

Recommended P.C Board Layout

Lead Free Process

RoHS Compliant

Mounting Style

Code 000	Code B00	Code C00	Code I00	Code I10
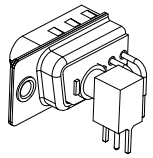	DIM. L= 4.0mm 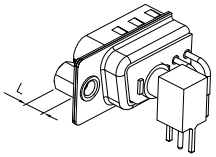	DIM. L= 4.0mm 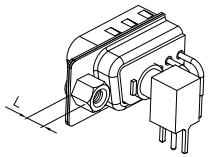	øA=3.2mm 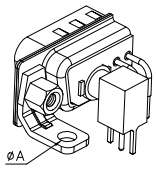	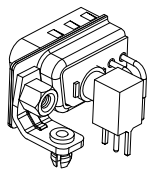

SYM	NAME	DATE	REVISIONS
4			
3			
2			
1	Karen	4/18-17'	ECNT117049/ECRT117003

		DATE
DRAWN BY:	Karen	4/20-17'
ENGINEER:	Sun	4/21-17'
CHECKED BY:	Eisley	4/21-17'
APPROVED BY:	Eisley	4/21-17'

UNIT: mm / inch

TOLERANCE UNLESS OTHERWISE SPECIFIED

.X ± 0.30/.012	X.° ± 1°
.XX ± 0.20/.008	.X° ±
.XXX ± 0.10/.004	.XX° ±

TITLE: 25W3 COAXIAL FEMALE D-SUB CONNECTOR (RIGHT ANGLE PCB MOUNT TYPE)

MATERIAL:

FINISH:

东莞市溪榜电子有限公司
DONG GUAN XI BANG ELECTRONI CS CO., LTD.

DRAWING NO.	25W306SC	PART NO.	25W3SCH********
SCALE	2 / 1	SHEET 2 OF 2	