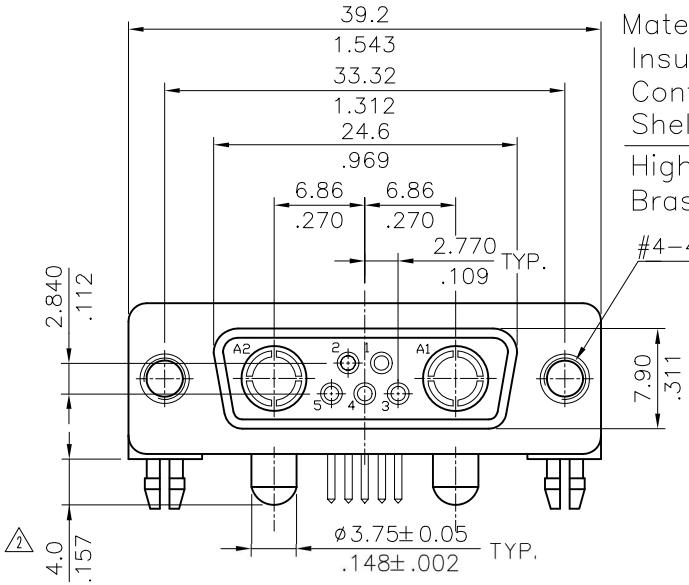

Materail:
Insulator: Glass filled Polyester UL 94V-0
Contact: Copper alloy
Shell: Steel, Tin plated as standard

High power Contact:
Brass with Gold plated

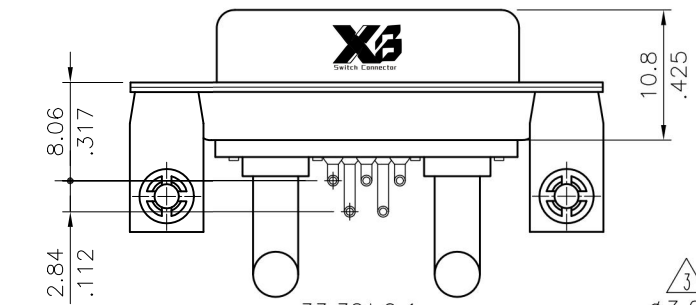

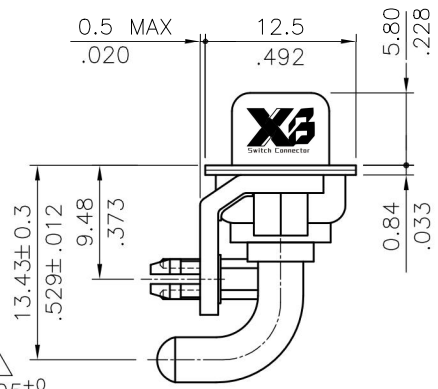

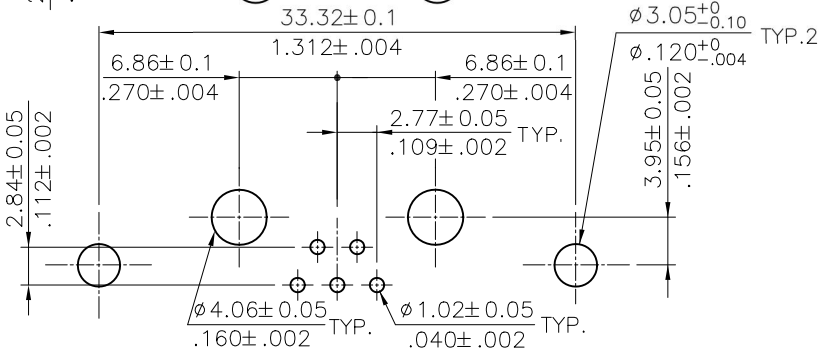

Recommended P.C Board Layout

Ordering Code

C7W2	S	P	H	3	2	1	40	I10
①	②	③	④	⑤	⑥	⑦	⑧	⑨

① Series No.
② Connector Type: S= Receptacle
③ Contact type: P= High Power Contact
④ Contact tail style: H= Right Angle Dip type
⑤ High power contact plating:
- 2= Gold flash plated over Nickel
- 3= 15μ" Gold plated over Nickel
- 4= 30μ" Gold plated over Nickel
- 5= 50μ" Gold plated over Nickel

⑥ Signal contact plating:
- 2= Gold flash plated over Nickel
- 3= 15μ" Gold plated over Nickel
- 4= 30μ" Gold plated over Nickel

⑦ Insulator color: 1= Black, 6= Green
⑧ Performance: 40= 40A
⑨ Mounting Style:
- 000= With ø3.05mm holes on shell
- B00= Riveted #4-40 UNC open nuts on front shell
- C00= Riveted #4-40 UNC open nuts on rear shell
- I00= Riveted #4-40 UNC ground tabs with ø3.2mm holes
- I10= Riveted #4-40 UNC ground tabs with board locks(standard)

Lead Free Process | RoHS Compliant

Mounting Style

Code	000	Code	B00	Code	C00	Code	I00	Code	I10
		DIM. L= 4.0mm		DIM. L= 4.0mm		ØA=3.2mm			

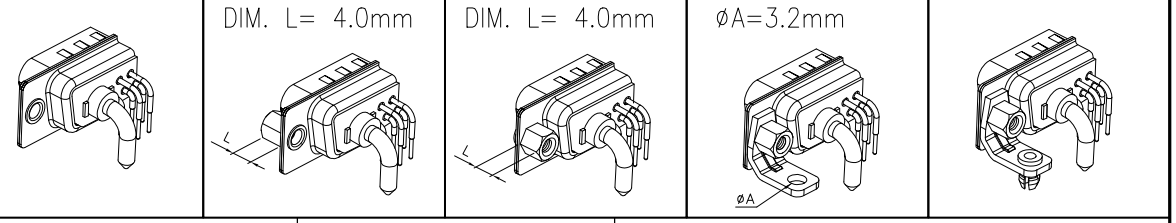

SYM	NAME	DATE	REVISIONS
4			
3	Karen	3/20-17'	ECNT117049/ECRT117003
2	Jim	10/13/06'	ECR06094-0/ECN06369
1	SUN	3/24/05'	ECR05025-0/ECN05095

		DATE
DRAWN BY:	Karen	3/20-17'
ENGINEER:	Sun	3/20-17'
CHECKED BY:	Eisley	3/22-17'
APPROVED BY:	Eisley	3/22-17'

UNIT: mm / inch

TOLERANCE UNLESS OTHERWISE SPECIFIED

.X ± 0.30/.012	X.° ± 1°
.XX ± 0.20/.008	.X° ±
.XXX ± 0.10/.004	.XX° ±

TITLE: C7W2 40A HIGH POWER FEMALE D-SUB CONNECTOR (RIGHT ANGLE TYPE)

MATERIAL:

FINISH:

东莞市溪榜电子有限公司
DONG GUAN XI BANG ELECTRONI CS CO., LTD.

DRAWING NO.	C7W214SE	PART NO.	C7W2SPH***40***
SCALE	2 / 1	SHEET 1 OF 1	