REV	DESCRIPTION	DRW	DATE
A	NEW		2020-10-29

双色灯：橙+正极 普绿-负极
单色灯：蓝-等

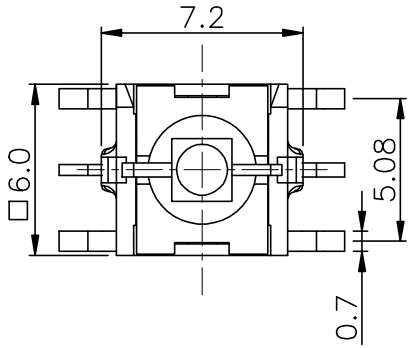

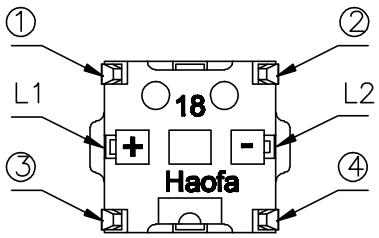

CIRCUIT

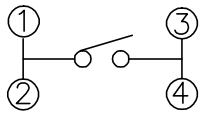

NOTES:
1.RATING: 12VDC 50mA
2.CONTACT RESISTANCE: 100mΩ Max
3.INSULATION RESISTANCE: 100MΩ 250VDC FOR 1MIN
4.DIELECTRIC STRENGTH: 250VAC(50/60Hz) FOR1MIN
5.LIFE TEST:100,000 CYCLES
6.OPERATION FORCE&TRAVEL: SEE SPECIFICATION

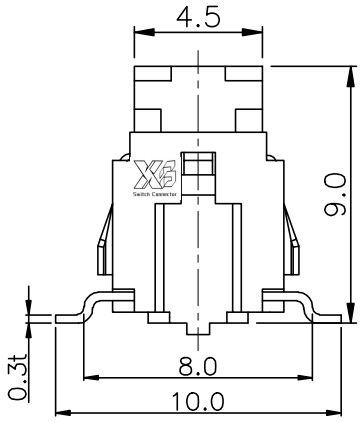

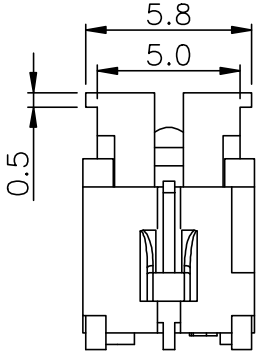

P.C.B LAYOUT

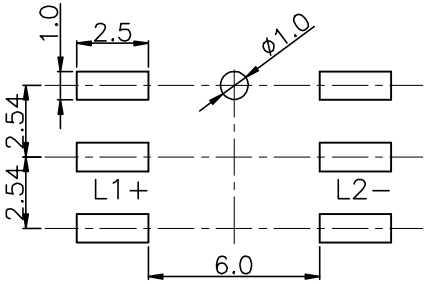

ITEM	PART NAME	MATERIAL
8	thermostability	230-245 ℃
7	Orange	600.5-612.5
6	Green	567.5-576
5	TERMINAL	Bronze Silver Plated
4	CONTACT	SUS
3	LED	GaAsP/GaP
2	BUTTON	PA66
1	HOUSING	PA66

LED COLOR

1	2	3	4	5	6	13	14	73
Red	Yellow	Green	Blue	White	Pure Green	Red Green	Red Blue	Orange Green

东莞市溪榜电子有限公司
DONG GUAN XI BANG ELECTRONI CS CO., LTD.

TOLERANCE				PART NO.:	TITLE	TACT SWITCH
UNLESS OTHERWISE STATED				带灯开关	MODEL	XB-TS-LED-HF01-1SM-73
X.X	±0.25	∠	±0.5°	DRAWN DATE 2012.05.16	MATL	
X.XX	±0.1	UNIT	mm		FINISH	
REV	A	SCALE	4:1	CHK'D DATE 2012.05.17		
SIZE	A4	SHEET	1 OF 1			