ROHS

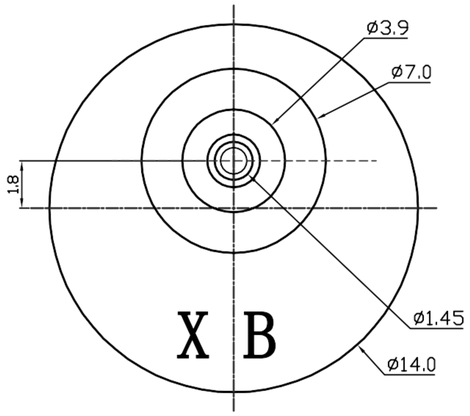

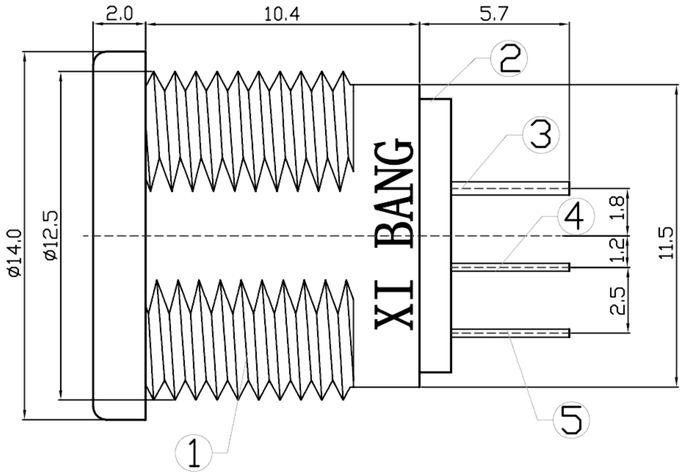

T:0.8-2 Dimensions of PC board holes

Tolerance : ±0.1(Printed-sided view)

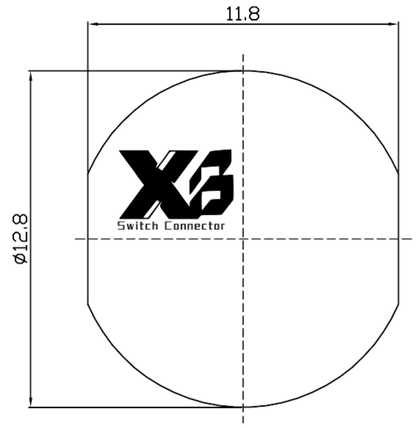

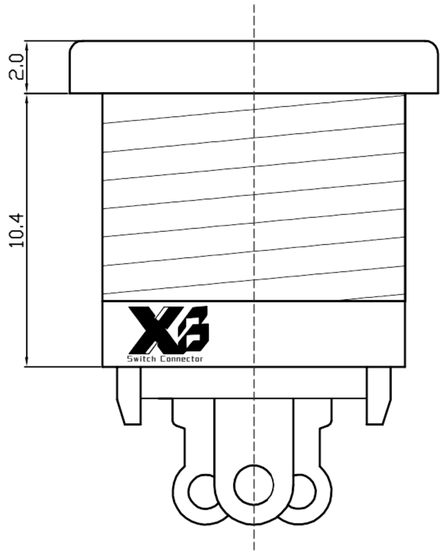

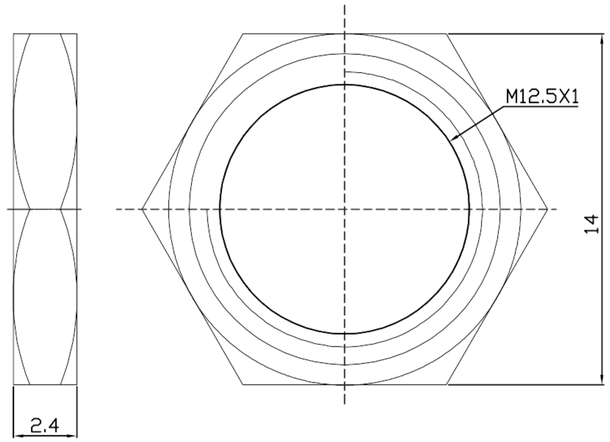

CIRCUIT DIAGRAM

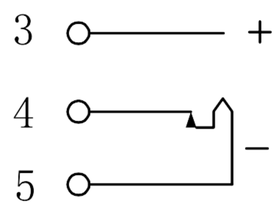

SPECIFICATION

1.Rating ：DC 12V 30V，3.0A 5.0A
2.Contact resistance：≤30mΩ
3.Insulation resistance：≥100MΩ
4.Withstand voltage：500VAC
5.Insertion and extraction force：3-20N
6.life test：5,000 cycles

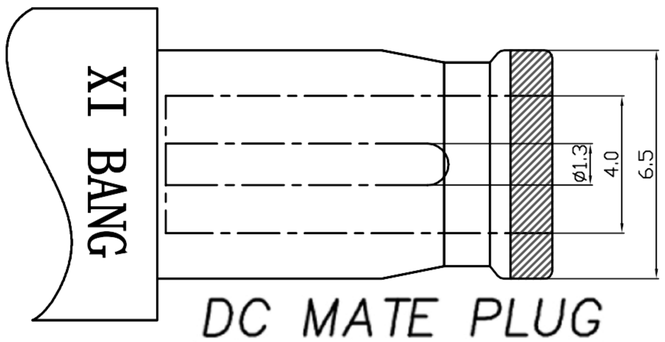

DC MATE PLUG

序号	零件图代号	名 称	数量	材 料	镀层/颜色	备 注
6	XB-DC-022-1.3-6	螺帽	1PCS	锌合金	镀锡	环保
5	XB-DC-022-1.3-5	5号脚	1PCS	C5191磷铜=0.3	镀锡	环保
4	XB-DC-022-1.3-4	4号脚	1PCS	C5210黄铜=0.3	镀锡	环保
3	XB-DC-022-1.3-3	3号脚	1PCS	C5210黄铜=0.5	镀锡	环保
2	XB-DC-022-1.3-2	盖子	1PCS	PBT (BLACK)	黑色	环保
1	XB-DC-022-1.3-1	塑料座	1PCS	PBT (BLACK)	黑色	环保

Switch Connector

东莞市溪榜电子有限公司
DONG GUAN XI BANG ELECTRONICS CO.,LTD

TITLE : XB DC Power Jack

MODEL : XB-DC-022-1.3

UNIT : MM	DWN.	ZENQ. CHEN	DATE		
SCALE : 3 : 1	CHK'D	DONG. PANG	DATE		
VERSION 01	APPD.	FEI. LONG. HE	DATE		

TOLERANCE
<=1.5mm ± 0.1
> 1.5mm ± 0.2
>=10.0mm ± 0.3

ANGLE TOL
± 2°

NO.	PART NAME	MATERIAL	QTY.	FINISHING
6	PIN	BRASS	1	Ni PLATED
5	TERMINAL	BRASS STRIP t=0.3	1	Ag PLATED
4	SPRING TERMINAL C	PBS STRIP t=0.25	1	Ag PLATED
3	TERMINAL B	BRASS STRIP t=0.3	1	Ag PLATED
2	TERMINAL A	BRASS STRIP t=0.3	1	Ag PLATED
1	HOUSING	PBT UL94-V0	1	BLACK