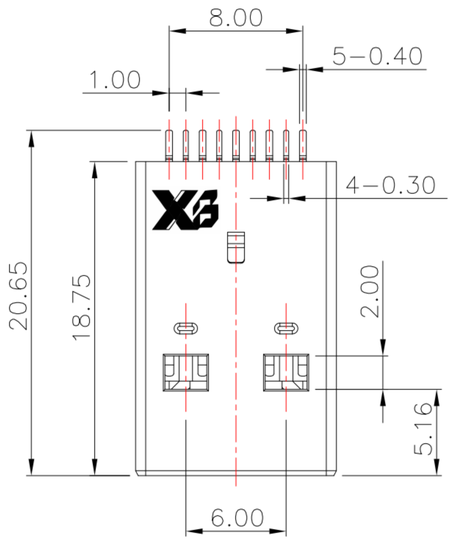

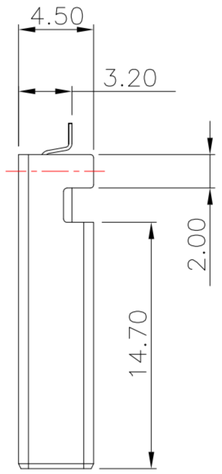

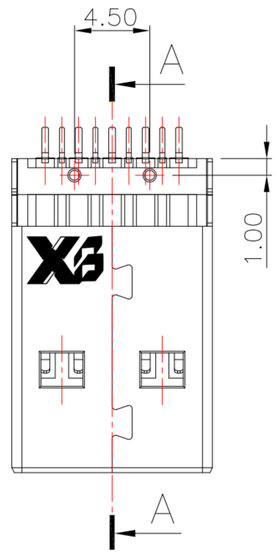

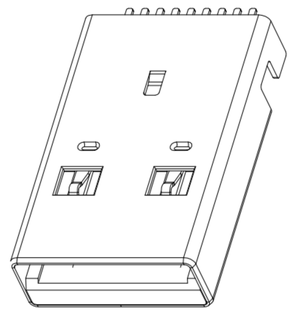

RoHS Compliant

SUA-111M3-30x-S277

鍍層厚度 :

Blank : 1u"
2 : 15u"
3 : 30u"

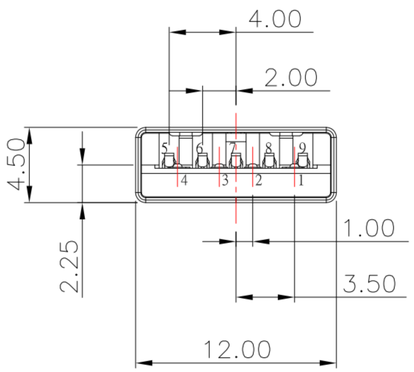

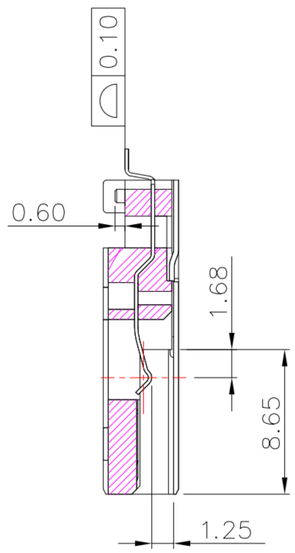

SECTION "A-A"

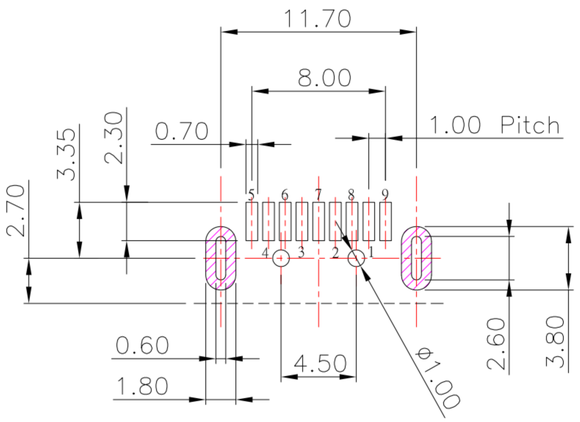

P.C.B LAYOUT MOUNTING PATTERN

NOTE:

1.MATERIAL:

1.1 INSULATOR: LCP, UL 94V-0,Blue

1.2 CONTACT: PHOSPHOR BRONZE

1.3 SHELL: SPCC

2.PLATING:

2.1 CONTACT: Plated Gold in Mating Area ;
Tin Plated on Solder Balls ;
Nickel under plated overall

2.2 SHELL: Nickel under Plated surface layer

3.ELECTRICAL CHARACTERISTICS;

3.1 CURRENT RATING: 1.5 Ampere Min

3.2 VOLTAGE: 30VAC(R.M.S)

3.3 CONTACT RESISTANCE: 30mΩ MAXIMUM

3.4 DIELECTRIC WITHSTANDING VOLTAGE: 500 VAC

3.5 INSULATION RESISTANCE 100 MΩ MIN

3.6 ENVIRONMENTAL: -55˚C ～ 105˚C

ITEM NO.	DESCRIPTION	DRAWN	DATE

东莞市溪榜电子有限公司
Switch Connector DONG GUAN XI BANG ELECTRONICS CO., LTD

TOLERANCE UNLESS OTHERWISE STATED : Up to 5 ±0.2; Above 5 ~ 15 ±0.3; Above 15 ~ 30 ±0.4; Above 30 ~ 50 ±0.5; Angle ±0.3°

3RD. ANGEL'S | UNITS MM

DRAWN BY: Jack Lu	DATE 08/21/14	MAT'L		TITLE	CONNECTOR
CHECKED BY: Jacky Chen	DATE 08/21/14	FINISH		MODLE	USB AM 3.0 沉板3.2mm L18.7mm
APPROVED BY: Tony Kao	DATE 08/21/14	SCALE	1 : 1	DWG NO.	SUA-111M3-30x-S277
		SHEET NO.	1 of 1	PART NO.	SUA-111M3-30x-S277

SIZE A4 VER R